Technical Data Sheet		Rosenberger
M4	Charging plug right angle	**C003-04-XXX-Y**

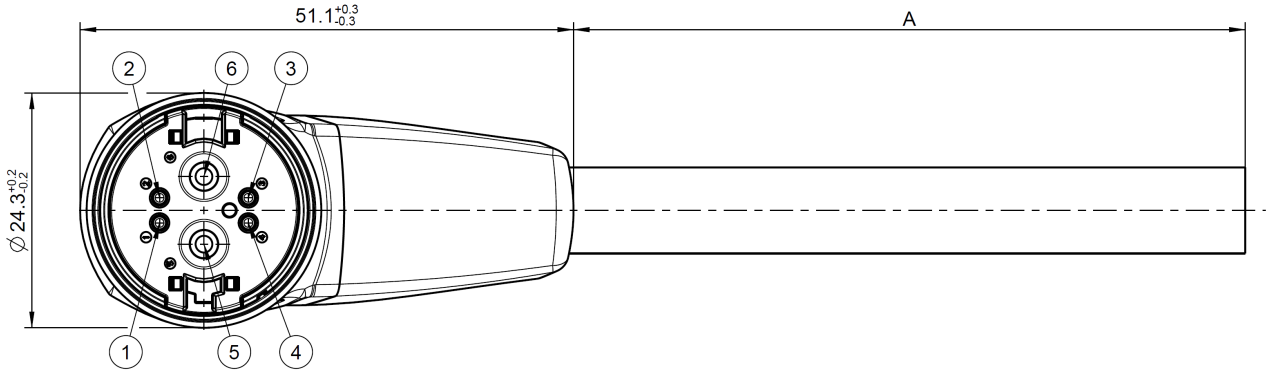

All dimensions are in mm; tolerances according to ISO 2768 m-H

Documents

Connector data sheet	M4K201-16C003B5-Y
Assembly drawing	C003-04-XXX-Y_LV
Cable data sheet	RTK-HV_01

Cable

RTK-HV 01	2x(2x0,35mm²) & 2x2,5mm²

Packing

Standard	x pcs / cardboard – depends on cable length

Coding

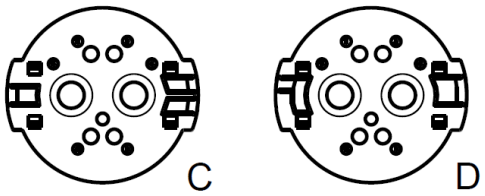

C003-04-XXX-Y

Gehaeusecodierung fuer Steckverbinder
housing code for connector

Codierung fuer Gesamtlaenge "A" (mm)
coding for total length "A" (mm)

Preliminary

While the information has been carefully compiled to the best of our knowledge, nothing is intended as representation or warranty on our part and no statement herein shall be construed as recommendation to infringe existing patents. In the effort to improve our products, we reserve the right to make changes judged to be necessary.

Draft	Date	Approved	Date
S. Schöndorfer	25.04.16	S. Schöndorfer	02.05.16

Rev.	Engineering change number	Name	Date
100	16-0688	B. Döring	02.05.16

Rosenberger Hochfrequenztechnik GmbH & Co. KG
P.O.Box 1260 D-84526 Tittmoning Germany
www.rosenberger.de

Tel. : +49 8684 18-0
Email : info@rosenberger.de

Dieses Dokument ist urheberrechtlich geschützt • This document is protected by copyright • Rosenberger Hochfrequenztechnik GmbH & Co. KG