Rev	AWO #	Description	Date	Appr
-		RELEASED	12/22/09	

APPROVED: _____

DATE: _____ TITLE: _____

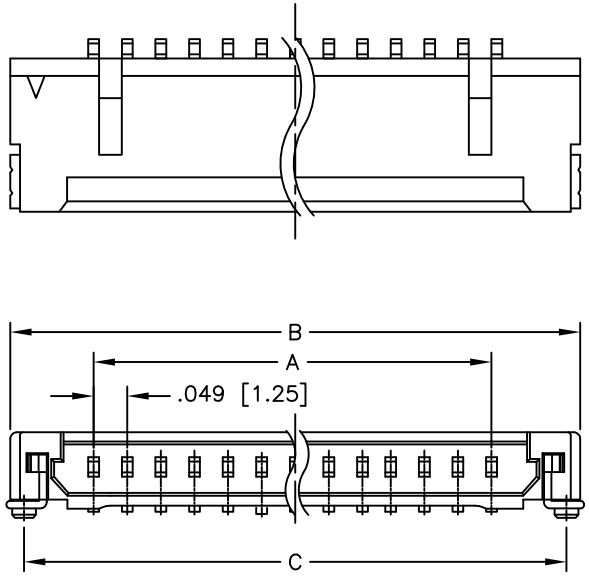

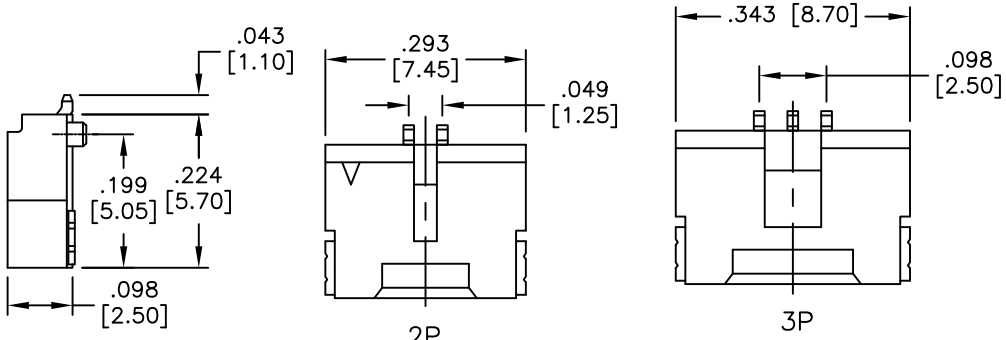

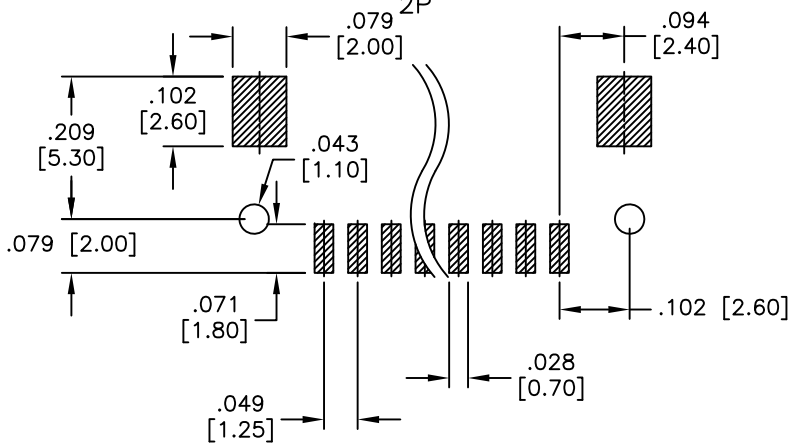

RECOMMENDED PCB LAYOUT

SPECIFICATIONS:
Material:
Insulator: Nylon 6T, rated UL 94V–0
Insulator color: Ivory
Contacts: Phosphor Brzone
Plating:
Tin over Nickel underplate overall
Electrical:
Operating voltage: 125 VAC max
Current rating: 1 Amps max
Contact resistance: 20 mohms max
Insulation resistance: 100 Mohms min
Dielectric withstanding voltage: 250 VAC for 1 minute
Temperature Rating:
Operating temperature: –40˚C to +85˚C
Environmental:
Lead free, RoHS compliant.
Recommended soldering temp: 260˚C for 5 sec.

RoHS COMPLIANT

A = .049 [1.25] X No. of Spaces
B = .049 [1.25] X No. of Spaces + .244 [6.20]
C = .049 [1.25] X No. of Spaces + .205 [5.20]

UNLESS OTHERWISE SPECIFIED
ALL DIMENSIONS ARE INCHES [MM]
TOLERANCES: EXCEPT AS NOTED

INCHES		HOLES	
.X	± .10	Ø.X	±.10
.XX	± .020	Ø.XX	±.015
.XXX	± .015	Ø.XXX	±.010

APPROVALS		DATE
DRAWN	DY	12/22/09
CHECKED		
APPROVED		

ADAM TECH
909 Rahway Avenue, Union, NJ 07083
Phone: 908-687-5000 Fax: 908-687-5710

TITLE .049 [1.25] PITCH WIRE TO BOARD HEADER RIGHT ANGLE, SMD TYPE

SIZE	PART NO.	REV.
X	125SH-D-XX-TR-SMT	-

REF: S00056T | SCALE: NTS | SHEET 1 OF 1