TOP VIEW

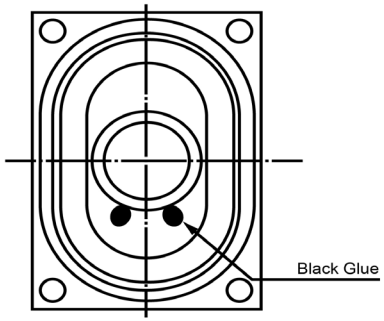

SIDE VIEW

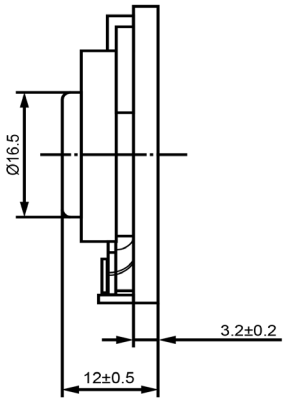

BOTTOM VIEW

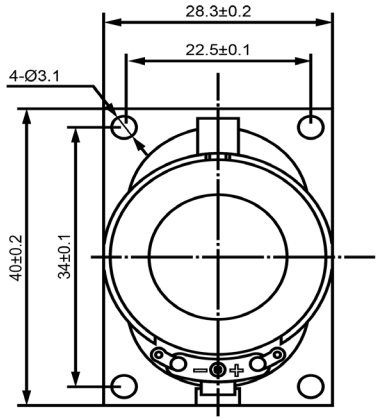

Specifications

Description	Value	Unit
Shape	Rectangle	
Resonant Frequency	380	(Hz)
Frequency Range	200 ~ 20,000	(Hz)
SPL @ 10cm	98	(dBA)
Impedance	8	(Ohm)
Cone Material	Cloth	
Nominal Power	2	(W)
Max Power	4	(W)
Mount Type	Frame Mount	
Operating Temperature	-20 ~ +60	°C
Storage Temperature	-20 ~ +60	°C
Weight	7.6	(g)

Notes

1) All dimensions are in mm unless otherwise noted
2) All parts meet RoHS

Revision History

Version	Description	Date	Approved
1	Released from Engineering	2/5/2014	J.S.

Drawn by	Date	Checked by	Date	Approved by	Date
G.W.	1/27/2014	C.E.	2/5/2014	J.S.	2/5/2014

DB UNLIMITED

Dynamic Speaker

SC400308-1

sales@dbunlimitedco.com | www.dbunlimitedco.com
©2014, DB Unlimited