AN8146FBP

High Speed 10-Bit 3-Ch. D/A Converter

■ Overview

The AN8146FBP is a D/A converter for video band with input/output of three channels. It is suitable for the various image equipments such as hi-vision device or monitor.

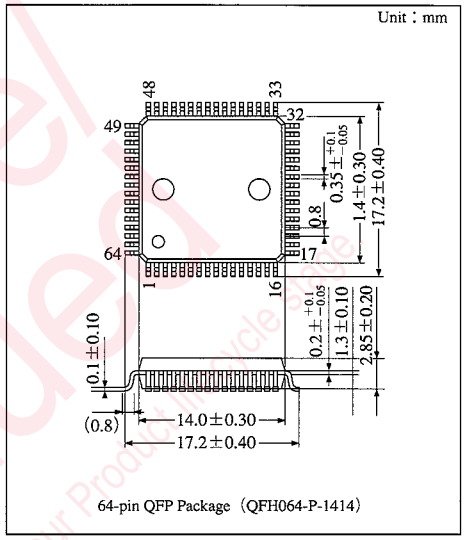

64-pin QFP Package (QFH064-P-1414)

■ Features

- 10-bit resolution
- High speed : maximum conversion rate of 50 MSPS
- Low consumption power : 450 mW
- Input level : TTL level
- Single power supply : 5V
- Reference power supply built-in

■ Application Field

- Image equipment such as hi-vision device
- OA equipment such as image scanner
- Measuring equipment such as digital oscilloscope

■ Block Diagram

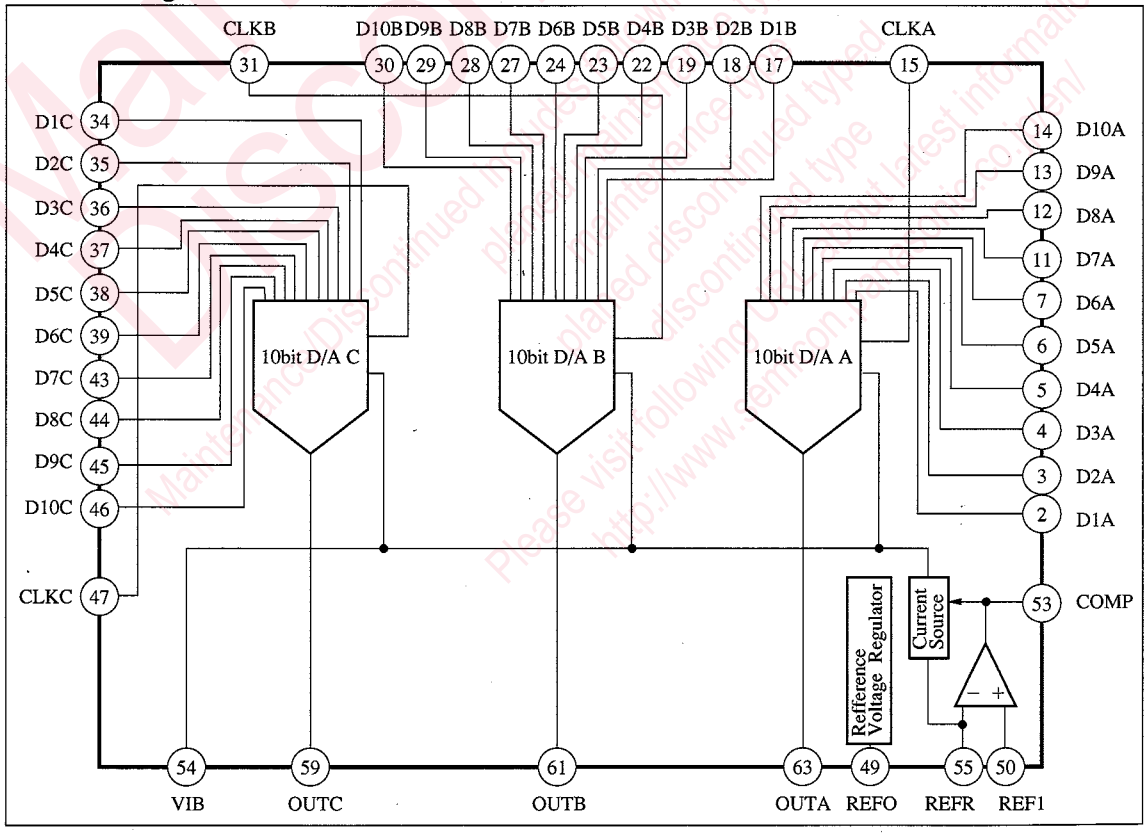

Maintenance/Discontinued
Maintenance/Discontinued in order to drawing four Product Lifecycle Stage
Please visit following URL for latest information.
http://www.semicon.com/ja/ja/sc.co.jp/en/

■ Pin Descriptions

Pin No.	Symbol	Pin name	Pin No.	Symbol	Pin name
1	NC	NC	33	NC	NC
2	D1A	Digital input 1-bit (MSB) A	34	D1C	Digital input 1-bit (MSB) C
3	D2A	Digital input 2-bit A	35	D2C	Digital input 2-bit C
4	D3A	Digital input 3-bit A	36	D3C	Digital input 3-bit C
5	D4A	Digital input 4-bit A	37	D4C	Digital input 4-bit C
6	D5A	Digital input 5-bit A	38	D5C	Digital input 5-bit C
7	D6A	Digital input 6-bit A	39	D6C	Digital input 6-bit C
8	NC	NC	40	NC	NC
9	NC	NC	41	NC	NC
10	NC	NC	42	NC	NC
11	D7A	Digital input 7-bit A	43	D7C	Digital input 7-bit C
12	D8A	Digital input 8-bit A	44	D8C	Digital input 8-bit C
13	D9A	Digital input 9-bit A	45	D9C	Digital input 9-bit C
14	D10A	Digital input 10-bit (LSB) A	46	D10C	Digital input 10-bit C
15	CLKA	Clock input A	47	CLKC	Clock input C
16	DGND	Digital ground	48	AGND	Analogue ground
17	D1B	Digital input 1-bit (MSB) B	49	REFO	Reference voltage output
18	D2B	Digital input 2-bit B	50	REFI	Reference voltage input
19	D3B	Digital input 3-bit B	51	NC	NC
20	NC	NC	52	NC	NC
21	NC	NC	53	COMP	Compensation capacitance
22	D4B	Digital input 4-bit B	54	VIB	Stabilized pin
23	D5B	Digital input 5-bit B	55	REFR	Reference resistance
24	D6B	Digital input 6-bit B	56	NC	NC
25	NC	NC	57	NC	NC
26	NC	NC	58	AGND	Analogue ground
27	D7B	Digital input 7-bit B	59	OUTC	Analogue output C
28	D8B	Digital input 8-bit B	60	AVCC	Analogue power supply
29	D9B	Digital input 9-bit B	61	OUTB	Analogue output B
30	D10B	Digital input 10-bit B	62	AVCC	Analogue power supply
31	CLKB	Clock input B	63	OUTA	Analogue output A
32	DVCC	Digital power supply	64	AGND	Analogue ground

Maintenance/Discontinued Please visit following URL for latest information http://www.semicon.panasonic.co.jp/en/

■Major Characteristics (V_{CC}=5V, Ta=25℃)

Parameter	Symbol	Rating	Unit
Resolution	RES	10	bit
Linearity error	E_L	±1.0	LSB
Differential linearity error	E_D	±1.0	LSB
Maximum conversion rate	F_{CMAX}	50	MSPS

■ Absolute Maximum Ratings (Ta=25℃)

Parameter	Symbol	Rating	Unit
Supply voltage	V_{CC}	−0.3 to +7.0	V
Digital input voltage	V_{IN}	−0.3 to DV_{CC}	V
Analogue output current	I_O	30	mA
Reference input voltage	V_{REFI}	−0.3 to AV_{CC}	V
Power dissipation	P_D	585	mW
Operating ambient temperature	T_{opr}	−20 to +70	℃
Storage temperature	T_{stg}	−55 to +125	℃

■ Recommended Operating Conditions (Ta=25℃)

Parameter	Symbol	Condition	min	typ	max	Unit
Supply voltage	V_{CC}		4.75	5.0	5.25	V
Reference voltage	V_{REFI}		1.2	1.25	—	V
Output load resistance	R_O		63	75	86	Ω
Digital input voltage	V_{IH}		2.4	—	—	V
	V_{IL}		0	—	0.8	V
Clock input pulse width	t_{WH}	*1	8 *2	—	—	ns
	t_{WL}	*1	8 *2	—	—	ns
Setting-up time	t_S	*1	5	—	—	ns
Holding time	t_H	*1	1	—	—	ns

* 1 : Refer to the timing chart.
* 2 : $t_{WH}+t_{WL} \geqq 20$ns

A/D and D/A Converters

■ Electrical Characteristics (V_{CC}=5V, Ta=25℃)

Parameter	Symbol	Condition	min	typ	max	Unit
Supply current	I_{CC}		—	90	150	mA
Digital input leak current	I_{DI}	V_{IN}=0V, 5V	—	—	±30	μA
REFI input leak current	I_{REFI}	V_{IN}=0V, 5V	—	—	±30	μA
Reference output voltage	V_{REFO}	I_{REFO}=3mA	2.16	2.7	3.24	V
Linearty error	E_L		—	±0.5	±1.0	LSB
Differential linearty error	E_D		—	±0.5	±1.0	LSB
Maximum conversion rate	F_{CMAX}	R_{REF}=470Ω	50	—	—	MSPS
Full-scale output voltage	V_{FS}	R_O=75Ω	4.9	5.0	5.1	V
Zero-scale output voltage	V_{ZS}	$V_{REFO}-V_{REFI}$=1.4V	3.8	4.0	4.2	V

Maintenance/Discontinued
Maintenance/Discontinued includes following four Product lifecycle stage.
planed maintenance type
maintenance type
planed discontinued type
discontinued type
Please visit following URL about latest information
http://www.semicon.panasonic.co.jp/en/

■ Timing Chart

(Operation Timing)

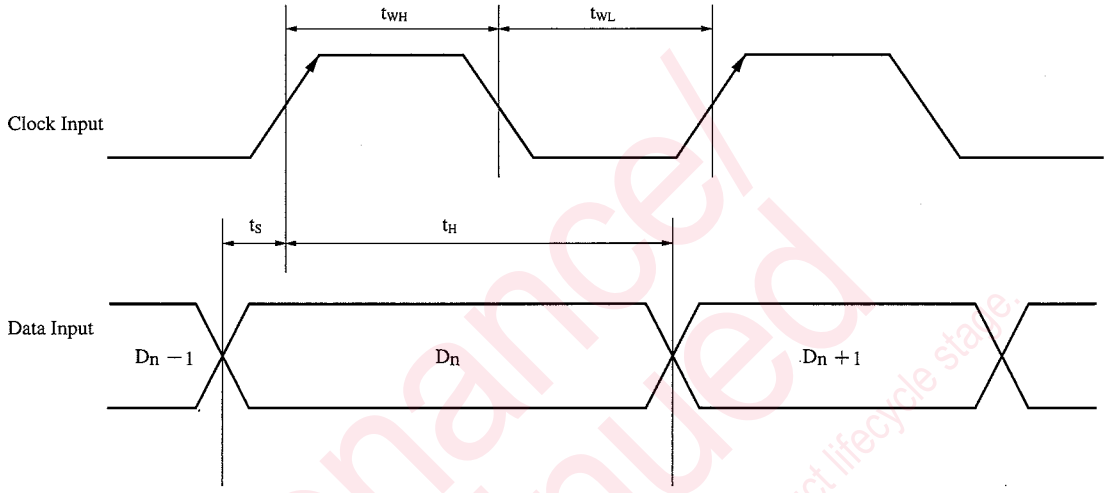

Maintenance/Discontinued
Maintenance/Discontinued includes following four Product lifecycle stage.
planed maintenance type
maintenance type
planed discontinued type
discontinued type
Please visit following URL about latest information.
http://www.semicon.panasonic.co.jp/en/

Request for your special attention and precautions in using the technical information and semiconductors described in this book

(1) If any of the products or technical information described in this book is to be exported or provided to non-residents, the laws and regulations of the exporting country, especially, those with regard to security export control, must be observed.

(2) The technical information described in this book is intended only to show the main characteristics and application circuit examples of the products. No license is granted in and to any intellectual property right or other right owned by Panasonic Corporation or any other company. Therefore, no responsibility is assumed by our company as to the infringement upon any such right owned by any other company which may arise as a result of the use of technical information described in this book.

(3) The products described in this book are intended to be used for standard applications or general electronic equipment (such as office equipment, communications equipment, measuring instruments and household appliances).
Consult our sales staff in advance for information on the following applications:
- Special applications (such as for airplanes, aerospace, automobiles, traffic control equipment, combustion equipment, life support systems and safety devices) in which exceptional quality and reliability are required, or if the failure or malfunction of the products may directly jeopardize life or harm the human body.
- Any applications other than the standard applications intended.

(4) The products and product specifications described in this book are subject to change without notice for modification and/or improvement. At the final stage of your design, purchasing, or use of the products, therefore, ask for the most up-to-date Product Standards in advance to make sure that the latest specifications satisfy your requirements.

(5) When designing your equipment, comply with the range of absolute maximum rating and the guaranteed operating conditions (operating power supply voltage and operating environment etc.). Especially, please be careful not to exceed the range of absolute maximum rating on the transient state, such as power-on, power-off and mode-switching. Otherwise, we will not be liable for any defect which may arise later in your equipment.
 Even when the products are used within the guaranteed values, take into the consideration of incidence of break down and failure mode, possible to occur to semiconductor products. Measures on the systems such as redundant design, arresting the spread of fire or preventing glitch are recommended in order to prevent physical injury, fire, social damages, for example, by using the products.

(6) Comply with the instructions for use in order to prevent breakdown and characteristics change due to external factors (ESD, EOS, thermal stress and mechanical stress) at the time of handling, mounting or at customer's process. When using products for which damp-proof packing is required, satisfy the conditions, such as shelf life and the elapsed time since first opening the packages.

(7) This book may be not reprinted or reproduced whether wholly or partially, without the prior written permission of our company.

20080805

Maintenance/Discontinued includes following Products
planed maintenance type
maintenance type
planed discontinued type
discontinued type
Please visit following URL about latest information.
http://www.semicon.panasonic.co.jp/en/