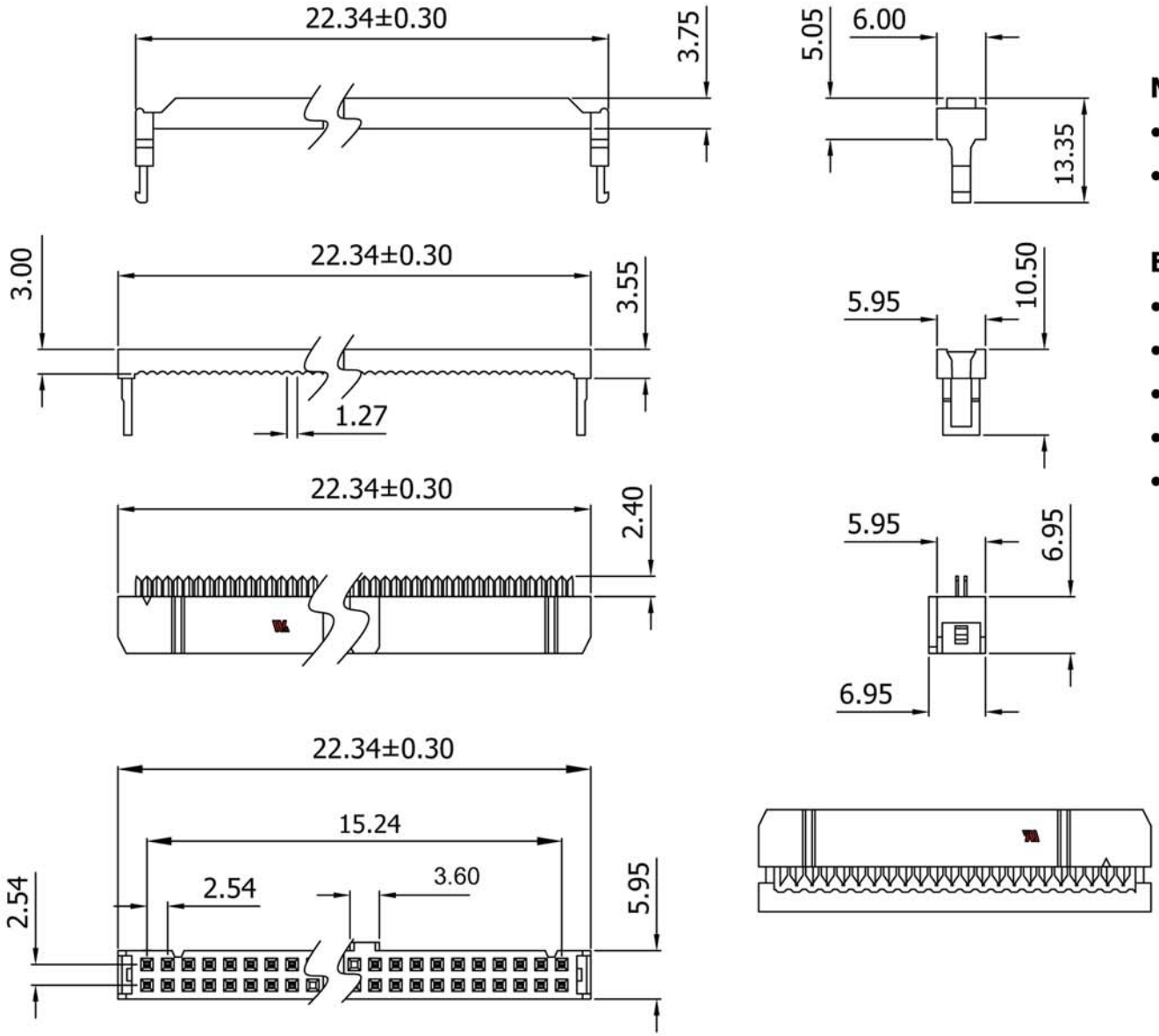

Material:

- Insulator: P.B.T. 30% Glass Fiber, UL 94V-0
- Contact Material: Phosphor Bronze, Gold flash over Nickel

Electrical:

- Current Rating: 1Amp
- Insulation Resistance: 1,000MΩ Min.
- Contact Resistance: 30MΩ Max.
- Dielectric Withstanding: 500V AC
- Operating Temperature: -40°C ~ +85°C

Unit: MM±0.20MM

Ⓐ = Assmann logo

RoHS Compliant

ITEM NO.

AWP14-7241-T

TITLE

IDC Socket - 2.54MM Pitch, Gold Flash, Central Lug w/Strain Relief, 14 Contacts

ASSMANN Electronics, Inc.
1840 W. Drake Drive, Suite 101 • Tempe, AZ 85283
Toll Free: 1-877-277-6266 • Email: info@usa-assmann.com

THIS DRAWING IS UNPUBLISHED
©Copyright 2010 by Assmann Electronic Components
All International Rights Reserved