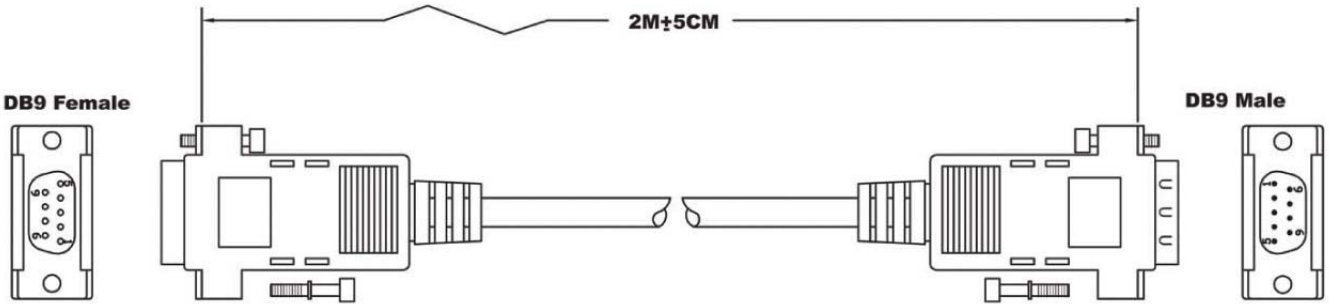

Configuration: One by One

DB9F		DB9M
1	———	1
2	———	2
3	———	3
4	———	4
5	———	5
7	———	7
8	———	8
9	———	9
Shield	———	Shield

Material:

1.Cable: #28 9C+1+AL/MY(Beige PVC Jacket) O.D:5.0MM
2.Both connectors with normal type
3.Screw(Metal):#4-40UNC Type
4.Assembly(Snap Hood) Type

Notes:

1.Total Length: 2M±5CM
2.Color: Beige
3.Assembly Type

RoHS Complaint

Scale	1:1							Name
TOLERANCE						Drawn	11.15.11	Chappell
X.X	±0.40					Approved		
X.XX	±0.25							
X.XXX	±0.15							
Angle	±3°							
			Modification	Date	Name			

ASSMANN WSW components

Item No.

AK230-2-R (2.0 Meters)

Title

Extension Cable for 9 Pin Interface,
D-Sub 9 Pin Male to D-Sub 9 Pin Female

Drawing No.

rev00

Replace

Sheet