DWG. NO.			
260-510-1410G			
REV	DESCRIPTION	BY DATE	APPD
C	RELEASE PER NPR 2733	MJF 1/14/02	

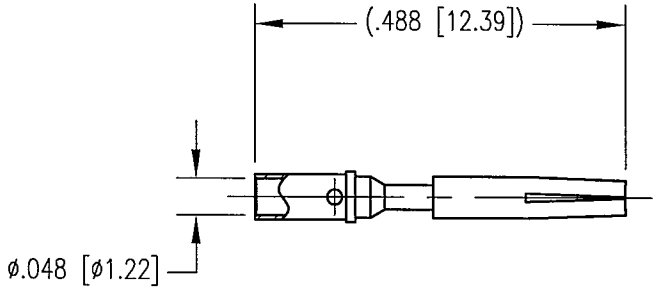

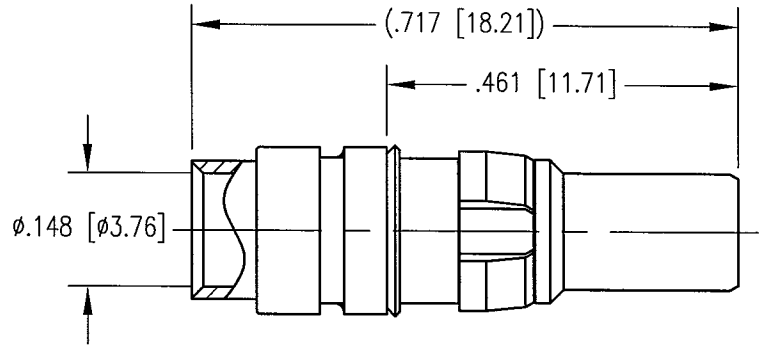

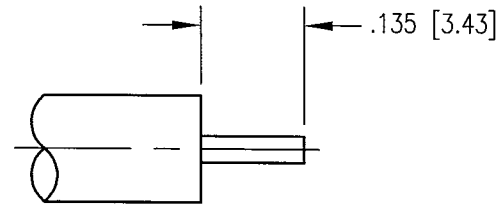

CABLE TRIMMING DIMENSIONS

NOTES:

1. MATERIALS:
   - BODY'S: BRASS PER ASTM B16
   - CONTACT: COPPER ALLOY
   - INSULATOR: TEFLON PER ASTM D1710
   - SPRING WASHER: PHOSPHOR BRONZE PER ASTM B103
   - CLIP RING: BERYLLIUM COPPER PER ASTM B194
2. FINISH:
   - BODY'S AND CENTER CONTACT: .000030 MIN. GOLD PER MIL-G-45204 OVER .000050 MIN. NICKEL PER QQ-N-290
   - SPRING WASHER: .000005 MIN. GOLD PER MIL-G-45204 OVER .000050 MIN. NICKEL PER QQ-N-290
   - CLIP RING: .000100 MIN. NICKEL PER QQ-N-290 OVER COPPER FLASH
3. FOR USE WITH .141 SEMI-RIGID CABLE OR EQUIVALENT.
4. FOR CABLING PROCEDURES USE CAP 5-15 WITH TRIMMING DIMENSIONS SHOWN.

PER ASME Y14.5M-1994
UNLESS OTHERWISE SPECIFIED:
DIMENSIONS ARE IN INCHES [MM]
TOLERANCES:
DECIMALS .XX ± .01/0.254
.XXX ± .005/0.127
ANGLES ± 2°
SCALE: 4:1

CUSTOMER DRAWING

DRAWN	DATE	CHECKED	DATE
MJF	1/14/02	RCH	1-14-02
APPROVED	DATE	APPROVED	DATE
GSM	1/14/02		1/14/02

Litton
Winchester/Retconn 400 Park Road Watertown, Connecticut 06795

TITLE
RDM PLUG ASSEMBLY WITH CAPTIVE CENTER CONTACT

A	260-510-1410G	SHT. 1 OF 1	REV. C

June 2006 - This drawing became the property of Winchester Electronics Corporation, Wallingford, CT.