Major League Electronics .079 cl Thicker Terminal Strip Headers - Custom - Right Angle

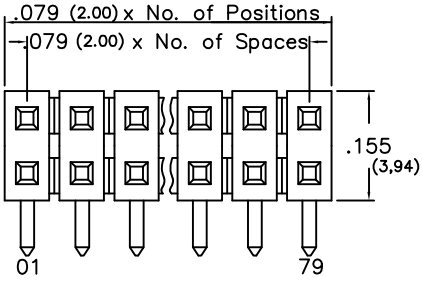

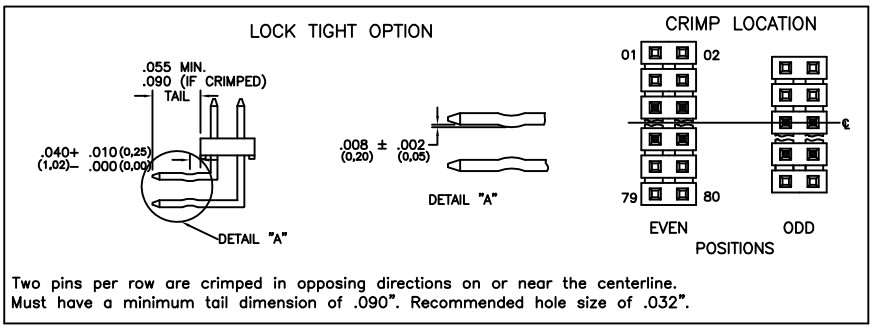

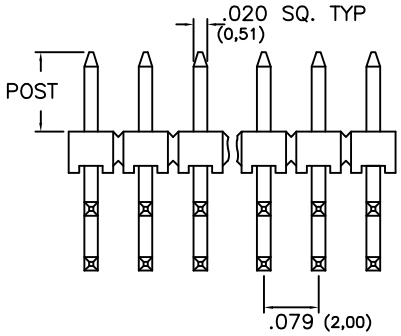

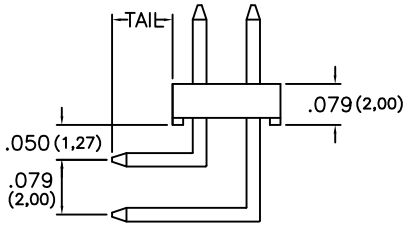

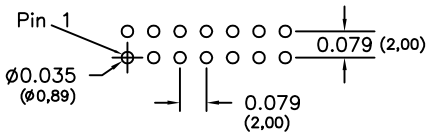

Recommended P.C. Board Layout

Tails may be clipped to achieve desired pin length

Length (L) – Post Height (P) – .150 (3.81) = Tail Length (T)

Ordering Information

TTSHCR-2 [XX] – [D] – [XX] – [XXX] – [XX] – [XX] – [XXX] – [LF]

Pins Per Row
01 - 40

Row Specification
D = Dual Row

Desired Post Height
Please specify
e.g. .100 (2.54) = 100

Polarized Position
Leave blank if not needed
If required, specify empty pin position, e.g. 012 for Pin 12

Lock Tight "LT" Option
Leave blank if not needed
LT = With

Lead Free

Pin Options				
Length		Max. Post Height		
.377	9.58mm	.137	3.48mm	02
.397	10.08mm	.157	3.99mm	04
.417	10.59mm	.177	4.49mm	06
.456	11.58mm	.216	5.49mm	08
.555	14.10mm	.315	8.00mm	10
.575	14.61mm	.335	8.51mm	12
.594	15.09mm	.354	8.99mm	14

	Plating Options
G	10µ Gold on Contact Area / Flash on Tail
T	Matte Tin All Over
GT	10µ Gold on Contact Area / Matte Tin on Tail
H	30µ Gold on Contact Area / Matte Tin on Tail
F	Gold Flash over Entire Pin

Specifications
Current Rating: 3.0 Ampere
Insulation Resistance: 1000MΩ Min.
Dielectric Withstanding: 500V AC
Contact Resistance: 20 mΩ Max.
Operating Temperature: -40°C to + 105°C
Max. Process Temperature:
- Peak: 260°C up to 10 secs.
- Process: 230°C up to 60 secs.
- Wave: 260°C up to 6 secs.
- Manual Solder: 350°C up to 5 secs.

Materials
Contact Material: Phosphor Bronze
Insulator Material: Nylon 6T
Plating: Au or Sn over 50µ" (1,27) Ni

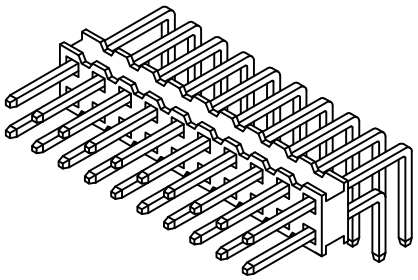

Mates with:
BCSS,
BSSH,
BSSHC,
BSSQ,
BSSQC,
BSSQM,
LSMBC,
LSSHSM,
SMBC,
SSHQ,
SSHQR,
SSHR,
SSHS,
SSHSM,
ULSMBC

Products cut to specific sizes are uncancellable/nonreturnable
Parts are subject to change without notice

TTSHCR-2-D SERIES	.079cl Dual Row - Custom Thicker Terminal Strip Headers	21 FEB 07	Scale NTS

UNLESS OTHERWISE SPECIFIED DIMENSIONS IN INCHES (MM) TOLERANCES ARE:
ONE PLACE DECIMALS ±.100
TWO PLACE DECIMALS ±.010
THREE PLACE DECIMALS ±.005
FOUR PLACE DECIMALS ±.0020
ANGLES ±5°

Major League ELECTRONICS
4235 Earnings Way, New Albany, Indiana, 47150, USA
1-800-782-3486 (USA/Canada/Mexico)
Tel: 812-944-7244
Fax: 812-944-7268
E-mail: mle@mlelectronics.com
Web: www.mlelectronics.com

Edition 1

Sheet 1/1