SK7190

DATE	REV	REVISION RECORD	APP	DR	CK
3-21 06	NC	ECO 25671		YK	

POSITRONIC INDUSTRIES BELIEVES THE DATA ON THIS DRAWING TO BE RELIABLE, SINCE THE TECHNICAL INFORMATION IS GIVEN FREE OF CHARGE, THE USER EMPLOYS SUCH INFORMATION AT HIS OWN DISCRETION AND RISK. POSITRONIC INDUSTRIES ASSUMES NO RESPONSIBILITY FOR RESULTS OBTAINED OR DAMAGES INCURRED FROM USE OF SUCH INFORMATION IN WHOLE OR IN PART.

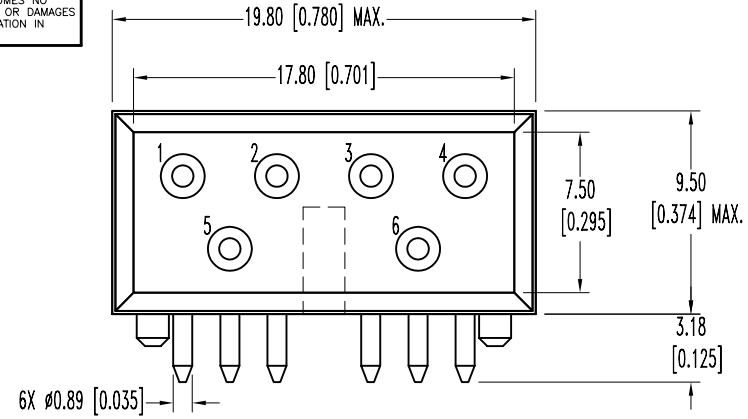

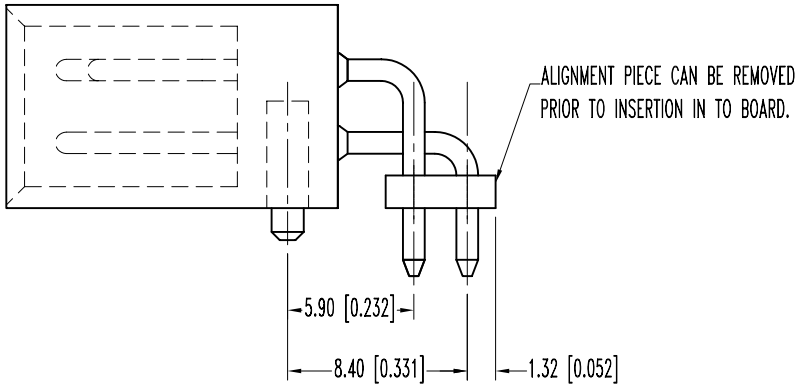

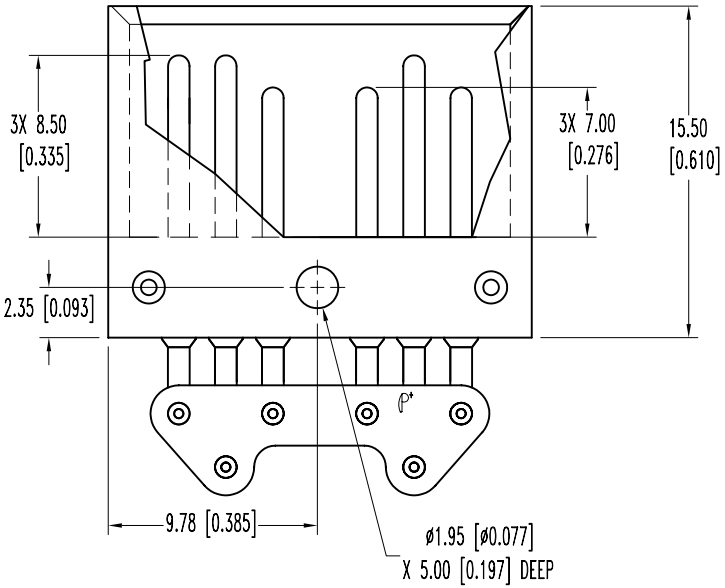

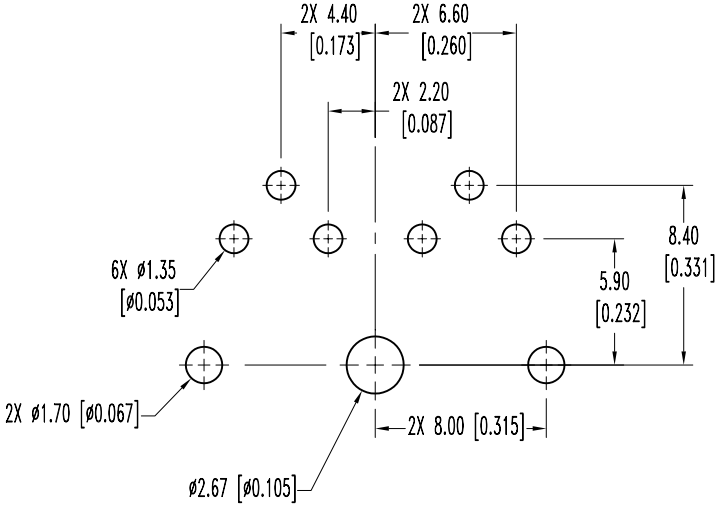

CONTACT HOLE PATTERN

NOTES:

1. MATERIALS AND FINISHES:
   INSULATOR: GLASS FILLED POLYESTER, UL 94V-0, BLUE COLOR.
   CONTACTS: HIGH CONDUCTIVITY PRECISION MACHINED COPPER ALLOY, WITH GOLD FLASH OVER NICKEL PLATE.
2. ELECTRICAL CHARACTERISTICS:
   INITIAL CONTACT RESISTANCE: 0.001 OHMS MAXIMUM PER IEC 512-2, TEST 2b.
   CONTACT CURRENT RATING: 20 AMPERES CONTINUOUS, ALL CONTACTS UNDER LOAD.
   INSULATOR RESISTANCE: 5 G OHMS PER 512-2, TEST 3a.
   WORKING VOLTAGE: 200 Vr.m.s.
3. WORKING TEMPERATURE: -55°C TO +125°C.
4. CONNECTORS ARE ROHS COMPLIANT PER ROHS DIRECTIVE 2002/95/EC OF 27 JAN 2003.
5. DIMENSIONS ARE IN MILLIMETERS [INCHES].

POSITRONIC INDUSTRIES INC.
www.connectpositronic.com

DECIMAL TOL. ±0.38 [0.015]	VPX SERIES	SCALE N.T.S.	DRAWN BY YK / APPROVED BY
	TITLE VPX6W6M400A1/AA-B1A5A6A		
ANGULAR TOL. ±5°	DATE 3-21-06	DRAWING NUMBER SK7190	REV. NC