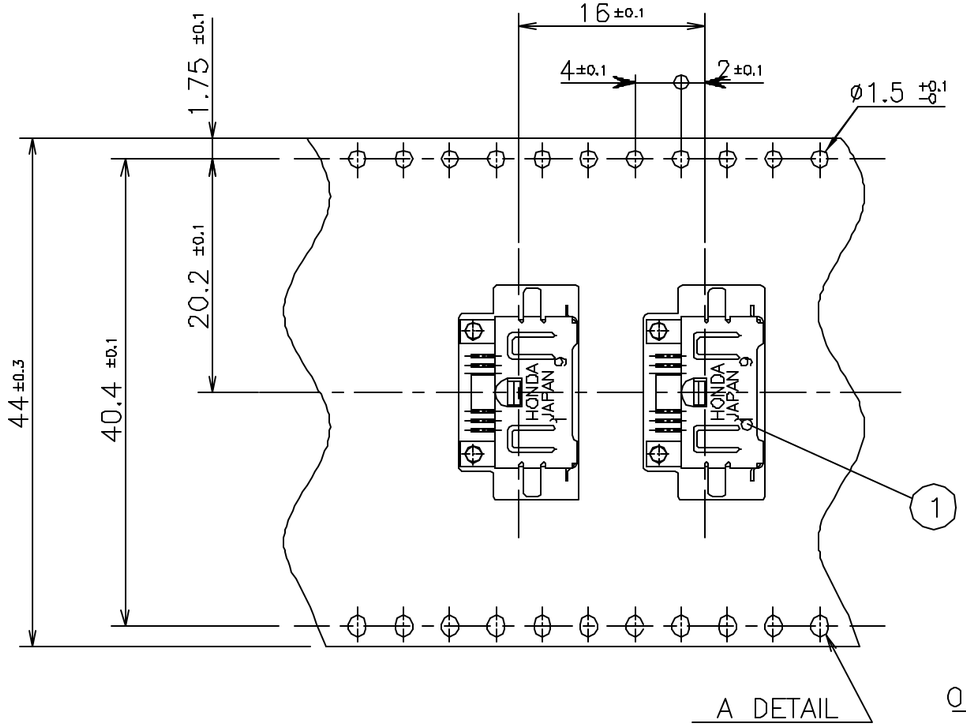

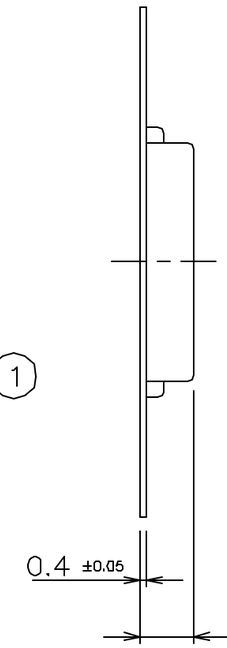

HONDA PRINT RM
SEP.25.1998
ISSUED

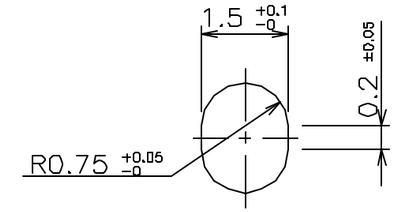

DETAIL A

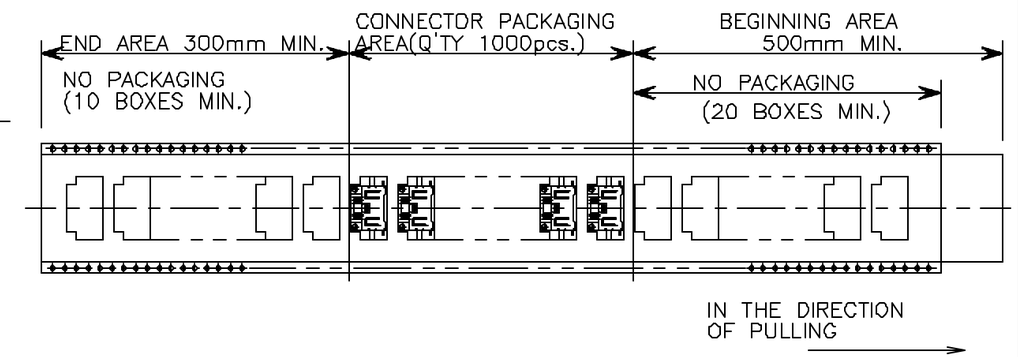

△PART No.	△ CONNECTOR PART No.
RMC-E9MYSN-0M02-MA-TP	RMC-E9MYSN-0M02-MA
RMC-E9MYSN-0M02-MA1-TP	RMC-E9MYSN-0M02-MA1
RMC-E9MYSN-0M02-MA2-TP	RMC-E9MYSN-0M02-MA2

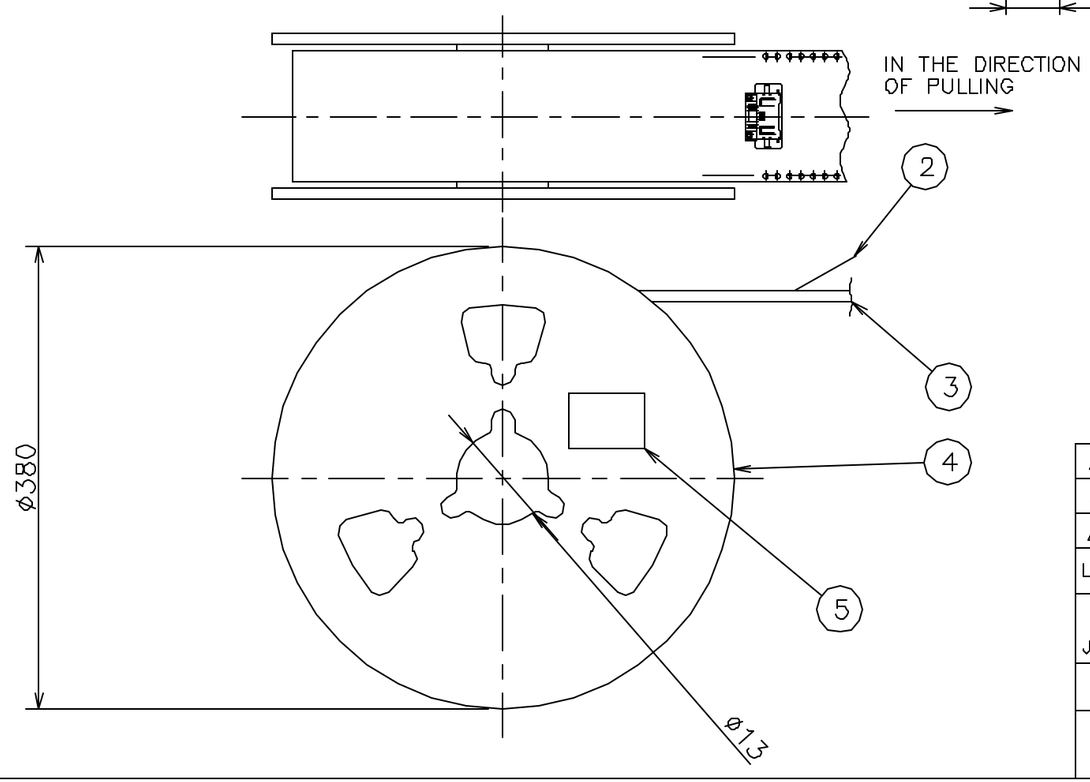

				5	LABEL	PAPER	1		
				4	REEL	PAPER	1		
△3				3	EMBOSSED TAPE	A PET	1		
△2				2	COVER TAPE	P.E.	1		
△1	SEP.16 1998	K.Y	CHANGE P/N	1	CONNECTOR		1000		
LTR.	DATE	BY	REV. DESCRIPT	NO.	PART NAME	MATERIAL	QTY	FINISH	NOTE

DATE	SCALE	UNIT mm(INCH)	3RD . A . P	HONDA TSUSHIN KOGYO., LTD.
JUN.4 (1998)	2/1			

DR	DE	CHK	CHK	APP	NAME	RMC-E9POS. MALE CONNECTOR WITH EMBOSSED TAPE AND REEL	
					PART NO.	△1 RMC-E9MYSN-0M02-MA( )-TP	REV. 1A

'RMC-E9MYSN-S001TP 'EA'