MAGNA TEC

290 - 660

BDT91
BDT93
BDT95

SILICON EPITAXIAL BASE POWER TRANSISTORS

N-P-N transistors in a plastic envelope intended for use in audio output stages and general amplifier and switching applications.
P-N-P complements are BDT92, BDT94 and BDT96.

QUICK REFERENCE DATA

			BDT91	BDT93	BDT95	
Collector-base voltage (open emitter)	V_{CBO}	max.	60	80	100	V
Collector-emitter voltage (open base)	V_{CEO}	max.	60	80	100	V
Collector current (d.c.)	I_C	max.		10		A
Collector current (peak value)	I_{CM}	max.		20		A
Total power dissipation up to T_{mb} = 25 °C	P_{tot}	max.		90		W
Junction temperature	T_j	max.		150		°C
D.C. current gain						
I_C = 4 A; V_{CE} = 4 V	h_{FE}			20 to 200		
I_C = 10 A; V_{CE} = 4 V	h_{FE}	>		5		
Transition frequency						
I_C = 0,5 A; V_{CE} = 10 V	f_T	>		4		MHz

MECHANICAL DATA

Dimensions in mm

Fig. 1 TO-220AB.

Collector connected to mounting base.

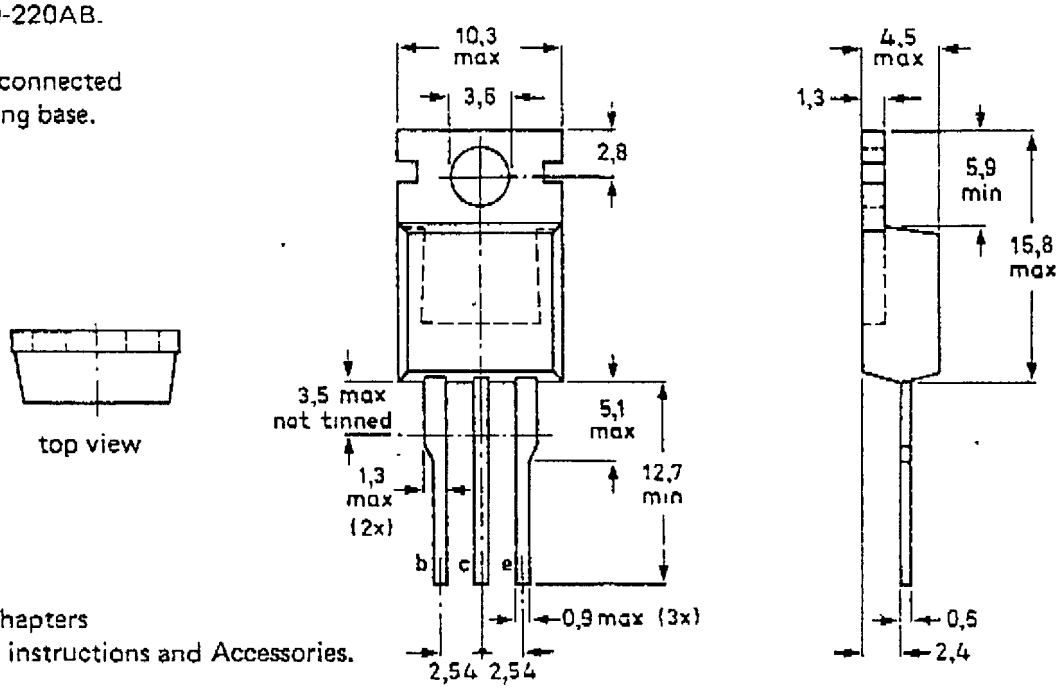

See also chapters Mounting instructions and Accessories.

MAGNATEC

BDT91
BDT93
BDT95

RATINGS

Limiting values in accordance with the Absolute Maximum System (IEC 134)

			BDT91	BDT93	BDT95	
Collector-base voltage (open emitter)	V_{CBO}	max.	60	80	100	V
Collector-emitter voltage (open base)	V_{CEO}	max.	60	80	100	V
Emitter-base voltage (open collector)	V_{EBO}	max.		7		V
Collector current (d.c.)	I_C	max.		10		A
Collector current (peak value)	I_{CM}	max.		20		A
Base current (d.c.)	I_B	max.		4		A
Total power dissipation up to T_{mb} = 25 °C	P_{tot}	max.		90		W
Storage temperature	T_{stg}			−65 to +150		°C
Junction temperature	T_j	max.		150		°C

THERMAL RESISTANCE

From junction to mounting base	$R_{th\ j\text{-}mb}$	=	1,4	K/W
From junction to ambient (in free air)	$R_{th\ j\text{-}a}$	=	70	K/W

CHARACTERISTICS

T_j = 25 °C unless otherwise specified

Collector cut-off current				
$I_E = 0$; $V_{CB} = V_{CBOmax}$	I_{CBO}	<	0,1	mA
$I_E = 0$; $V_{CB} = ½V_{CBOmax}$; T_j = 150 °V	I_{CBO}	<	5	mA
$I_B = 0$; $V_{CE} = V_{CEOmax}$	I_{CEO}	<	1	mA
Emitter cut-off current				
$I_C = 0$; V_{EB} = 7 V	I_{EBO}	<	1	mA
D.C. current gain (note 1)				
I_C = 4 A; V_{CE} = 4 V	h_{FE}		20 to 200	
I_C = 10 A; V_{CE} = 4 V	h_{FE}	>	5	
Base-emitter voltage (notes 1 and 2)				
I_C = 4 A; V_{CE} = 4 V	V_{BE}	<	1,6	V
Collector-emitter saturation voltage (note 1)				
I_C = 4 A; I_B = 0,4 A	V_{CEsat}	<	1	V
I_C = 10 A; I_B = 3,3 A	V_{CEsat}	<	3	V
Transition frequency at f = 1 MHz				
I_C = 0,5 A; V_{CE} = 10 V	f_T	>	4	MHz
Cut-off frequency				
I_C = 0,5 A; V_{CE} = 10 V	f_{hfe}	>	20	kHz

Notes
1. Measured under pulse conditions: $t_p \leq 300\ \mu s$, $\delta \leq 2\%$.
2. V_{BE} decreases by about 2,3 mV/K with increasing temperature.

MAGNATEC

BDT91
BDT93
BDT95

Second-breakdown collector current			
V_{CE} = 60 V; t_p = 0,1 s	$I_{(SB)}$	>	1,5 A
Switching times			
(between 10% and 90% levels)			
I_{Con} = 4 A; I_{Bon} = $-I_{Boff}$ = 0,4 A			
Turn-on time	t_{on}	typ.	0,5 µs
		<	1 µs
Turn-off time	t_{off}	typ.	2 µs
		<	4 µs

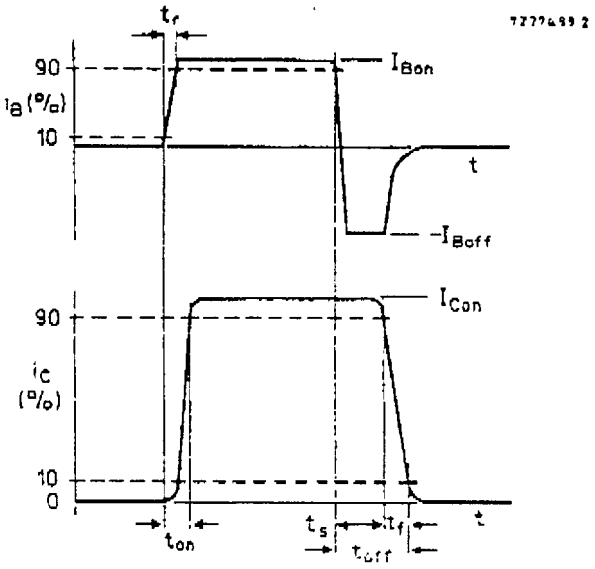

Fig. 2 Switching times waveforms.

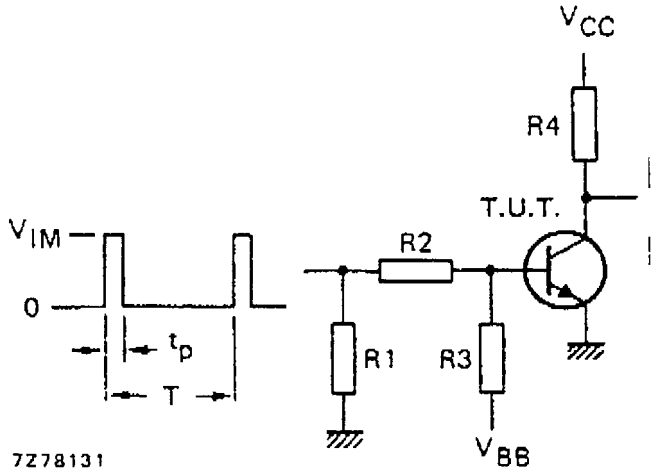

V_{IM} = 45 V
V_{CC} = 20 V
$-V_{BB}$ = 3,5 V
R1 = 210 Ω
R2 = 56 Ω
R3 = 10 Ω
R4 = 5 Ω
$t_r = t_f$ = 15 ns
t_p = 10 µs
T = 500 µs

Fig. 3 Switching times test circuit.

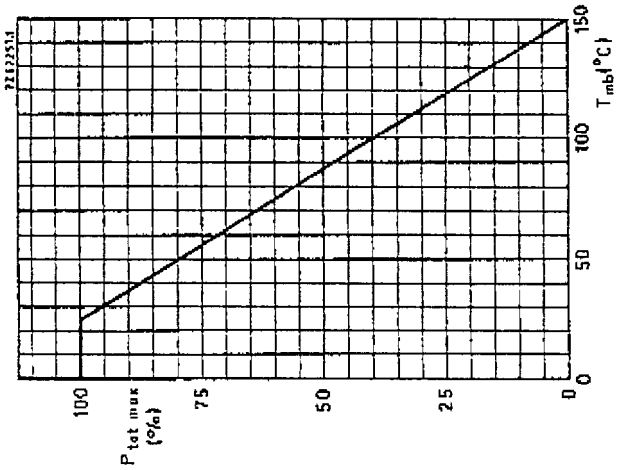

Fig. 5 Power derating curve.

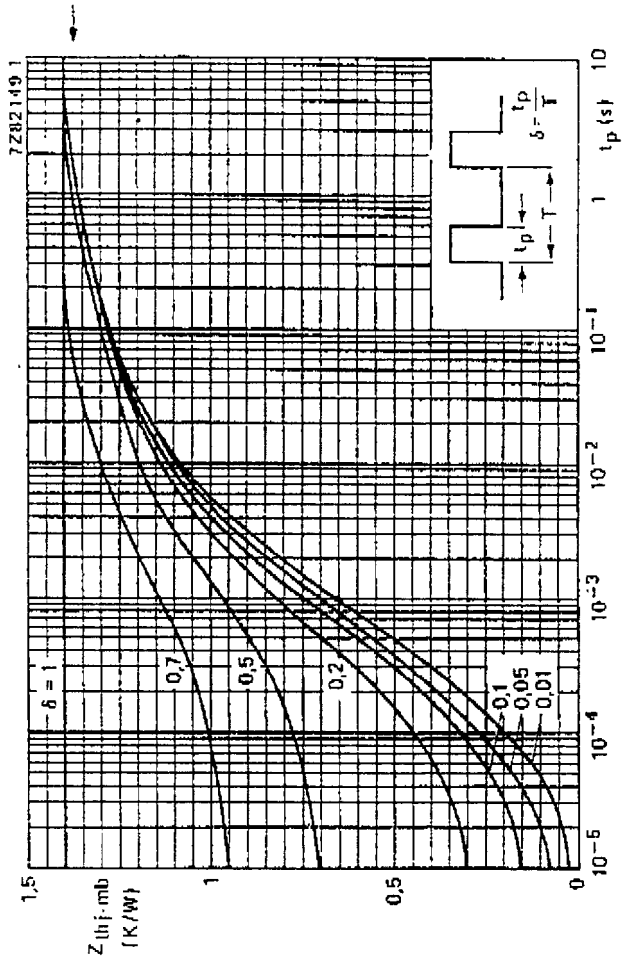

Fig. 6 Pulse power rating chart

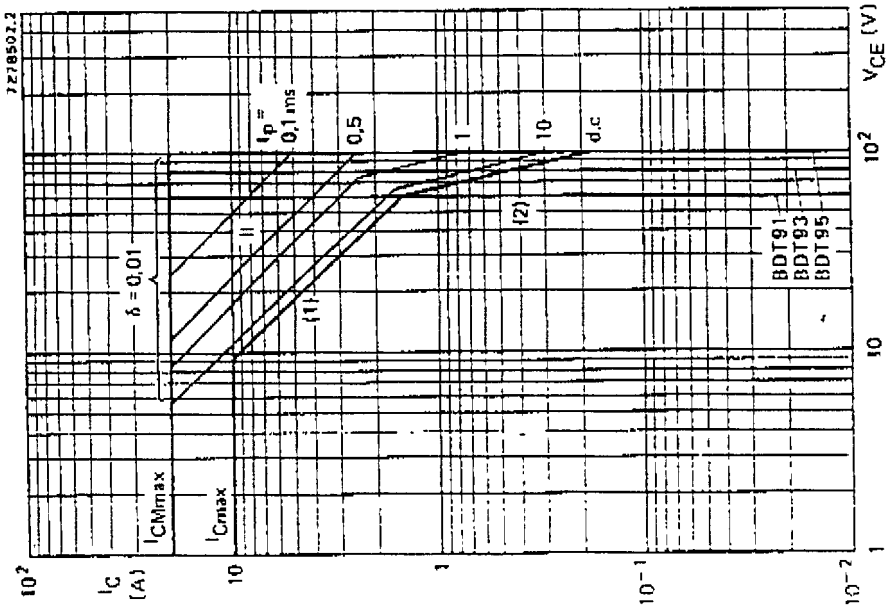

Fig. 4 Safe Operating Area; T_{mb} = 25 °C.

I Region of permissible d.c. operation.
II Permissible extension for repetitive pulse operation

(1) $P_{tot\ max}$ and $P_{peak\ max}$ lines.
(2) Second-breakdown limits (independent of temperature).

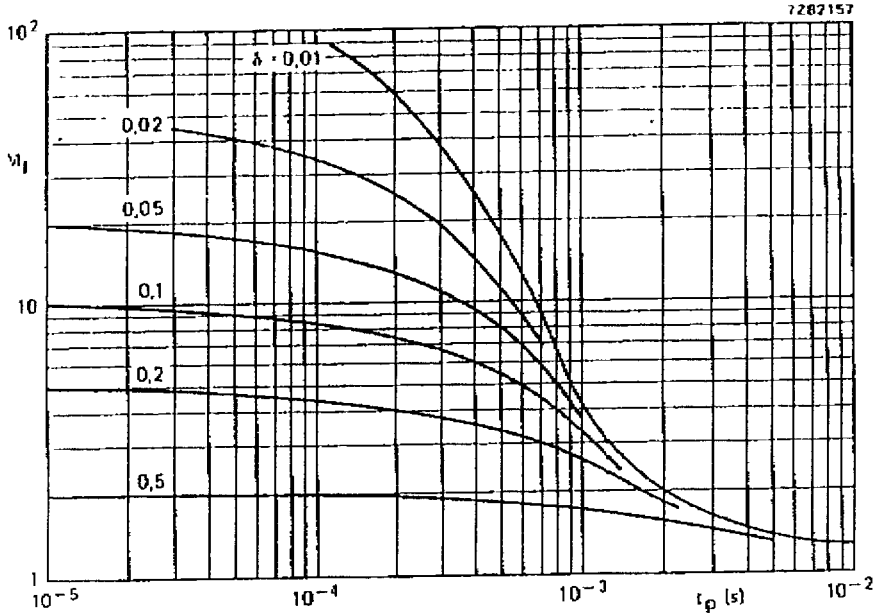

Fig 7 S.B. current multiplying factor at the V_{CEOmax} level.

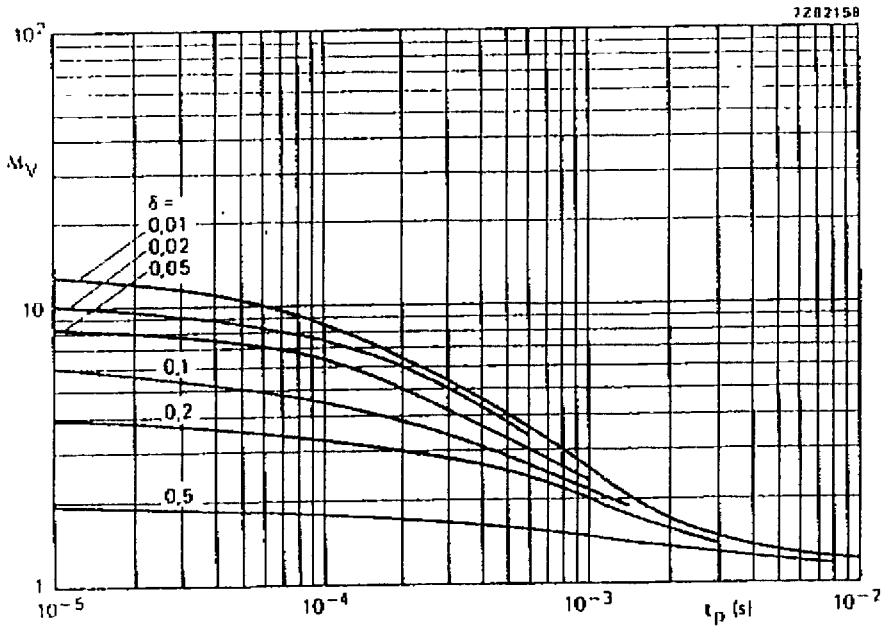

Fig 8 S.B. voltage multiplying factor at the I_{Cmax} level.

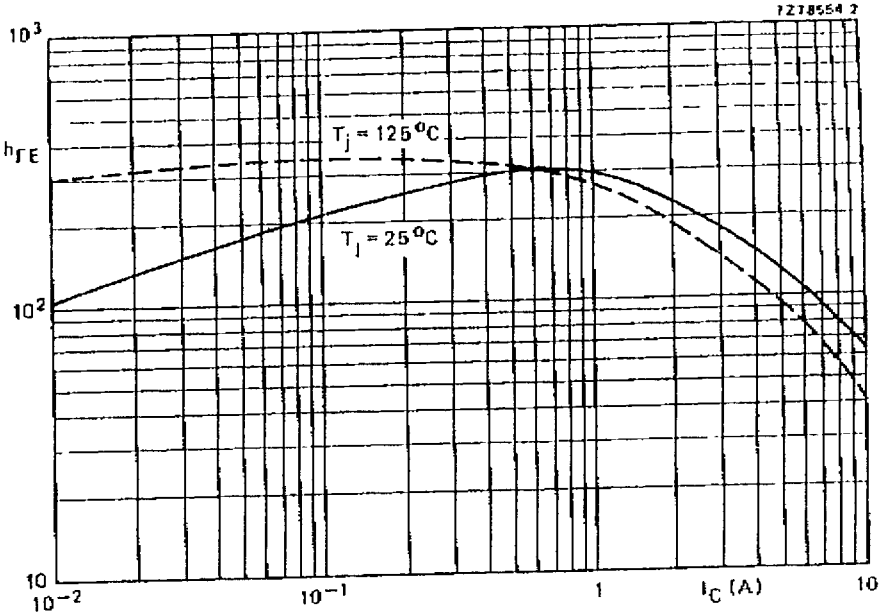

Fig. 9 Typical d.c. current gain at V_{CE} = 4 V.

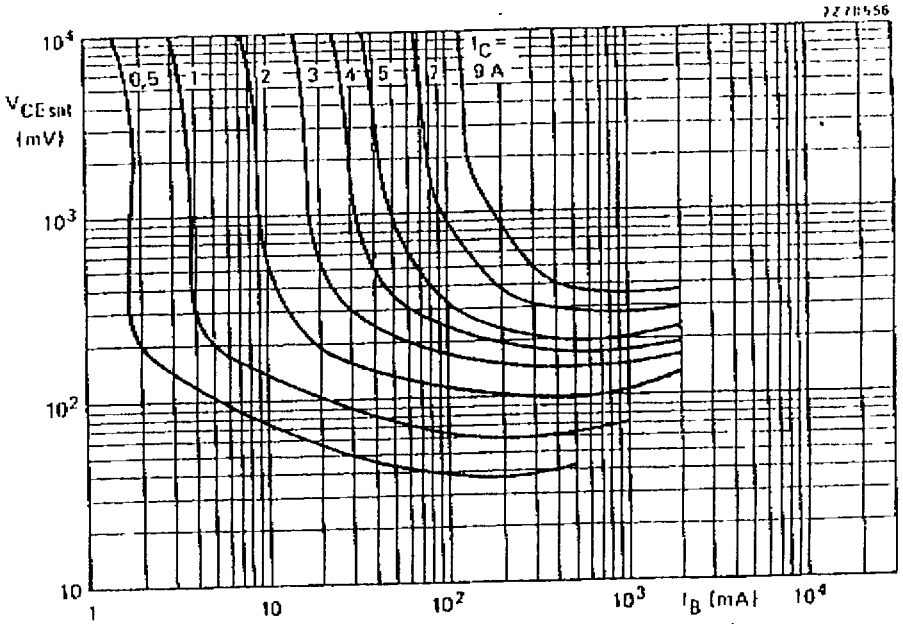

Fig. 10 Typical collector-emitter saturation voltage. T_{mb} = 25 °C