AO-12880A

•128 x 80 dots 1/80 Duty

FEATURE

1.Const
2.Drive : HD66741
3.3.0V ngle power input.
4.Exte temperature type.

液晶之友 电话：020-33819057
http://www.lcdfriends.com

BLOCK DIAGRAM

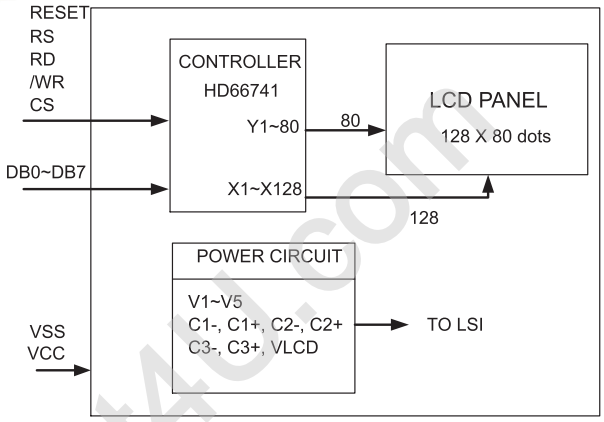

ELECTRICAL CHARACTERISTICS

Parameter	Symbol	Condition	Typ.Value	Unit.
LCD Driving Voltage	V0-V5	25°C	11.3	V
Supply Current	IDD	VDD=3.3V	0.05	mA

INTERFACE

1	2	3	4	5	6	7	8	9	10
V4OUT	V3OUT	V5OUT	V2OUT	GND	V1OUT	VCC	VLCD	GND	C1-
11	12	13	14	15	16	17	18	19	20
C3+	C1+	C3-	C2-	C2+	RS	/CS	/WR	/RESET	RD
21	22	23	24	25	26	27	28	29	30
DB0	OSC2	DB1	OSC1	DB2	DB7	DB3	DB6	DB4	DB5

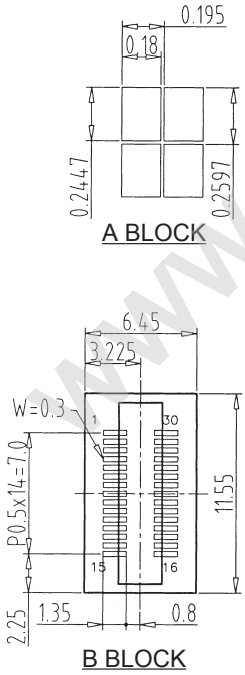

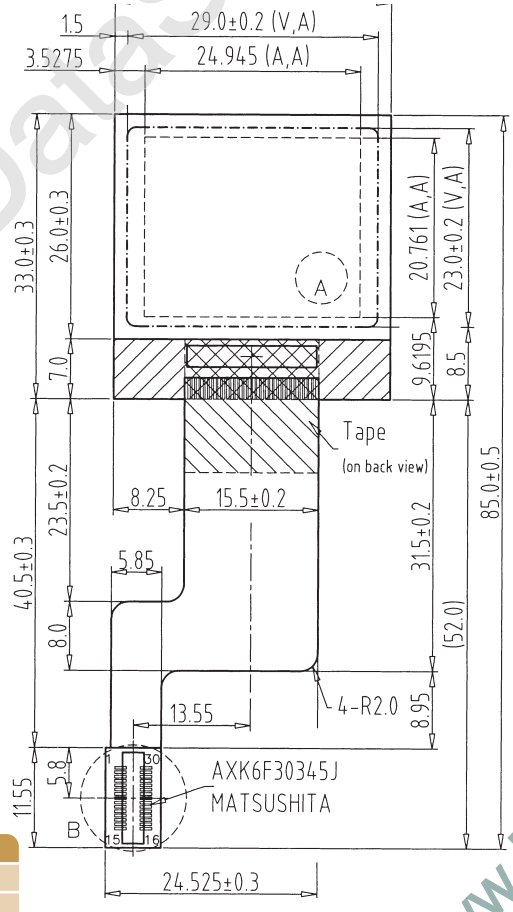

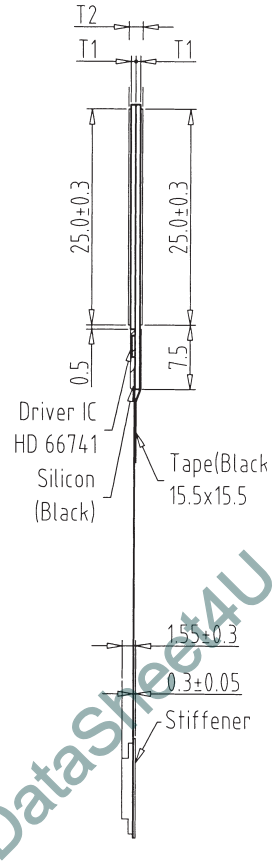

THICKNESS:

VERSION	T1	T2
LCD	0.4	1.4Max
	0.55	1.7Max

www.DataSheet4U.com