C-MOS QUAD SPST ANALOG SWITCH

—TOP VIEW—

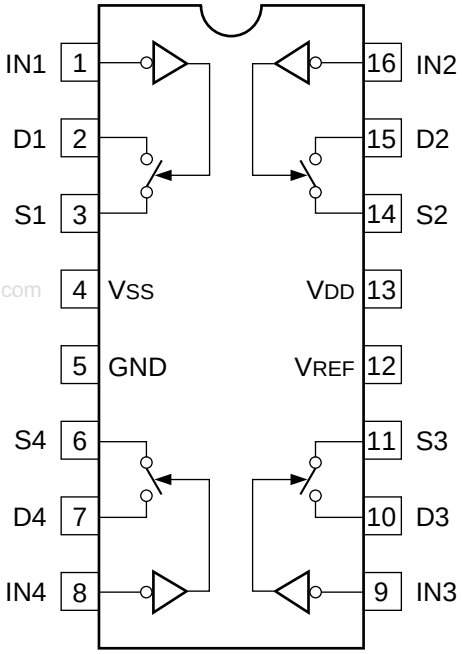

www.DataSheet4U.com

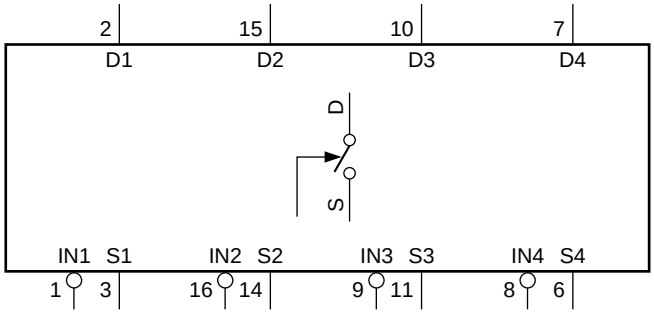

D1 - D4 : DRAIN
S1 - S4 : SOURCE
SPST : SINGLE-POLE, SINGLE-THROW

IN	SWITCH
0	ON
1	OFF

0 : LOW LEVEL
1 : HIGH LEVEL

www.DataSheet4U.com