620-051
Strain Relief
Rotatable Coupling - 45° and 90°

CONNECTOR DESIGNATOR

G

ROTATABLE COUPLING

620 G A 051 M 17

- Product Series — 620
- Connector Designator — G
- Angle and Profile — A
  - A = 90°
  - B = 45°
- Basic Part No. — 051
- Finish (Table II) — M
- Shell Size (Table III) — 17

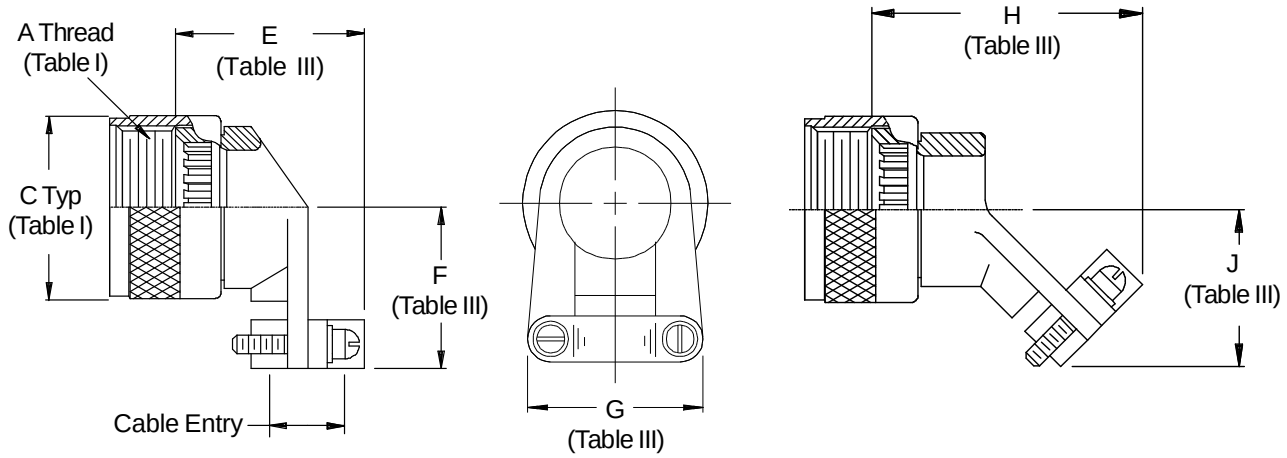

See inside back cover fold-out or pages 13 and 14 for Tables I and II.

TABLE III: CABLE ENTRY

Shell Size	E Closed Max		F Max		G Max		H Closed Max		J Max		Cable Entry Closed		Cable Entry Open	
11	1.071	(27.2)	.929	(23.6)	.903	(22.9)	1.650	(41.9)	.929	(23.6)	.177	(4.5)	.286	(7.3)
13	1.071	(27.2)	.929	(23.6)	.977	(24.8)	1.650	(41.9)	.929	(23.6)	.177	(4.5)	.286	(7.3)
15	1.280	(32.5)	1.056	(26.8)	1.151	(29.2)	1.765	(44.8)	1.056	(26.8)	.250	(6.4)	.416	(10.6)
17	1.392	(35.4)	1.233	(31.3)	1.281	(32.5)	1.874	(47.6)	1.233	(31.3)	.291	(7.4)	.476	(12.1)
19	1.517	(38.5)	1.296	(32.9)	1.406	(35.7)	1.918	(48.7)	1.296	(32.9)	.348	(8.8)	.626	(15.9)
23	1.642	(41.7)	1.358	(34.5)	1.576	(40.0)	1.962	(49.8)	1.358	(34.5)	.429	(10.9)	.831	(21.1)
25	1.767	(44.9)	1.420	(36.1)	1.666	(42.3)	2.006	(51.0)	1.420	(36.1)	.523	(13.3)	.956	(24.3)
29	1.905	(48.4)	1.634	(41.5)	2.046	(52.0)	2.301	(58.4)	1.634	(41.5)	.643	(16.3)	1.081	(27.5)
33	1.968	(50.0)	1.859	(47.2)	2.209	(56.1)	2.389	(60.7)	1.859	(47.2)	.704	(17.9)	1.187	(30.1)

1. Cable Entry is defined as the accommodation entry for the wire bundle or cable. Dimensions are not intended for inspection criteria.
2. Metric dimensions (mm) are indicated in parentheses.

© 2005 Glenair, Inc. CAGE Code 06324 Printed in U.S.A.