BIPMIC® – Cascadable Silicon Bipolar Amplifier

Electrostatic sensitive device.
Observe precautions for handling.

Applications

General purpose 50 Ω gain block for narrow and broad band IF and RF amplifiers in commercial and industrial applications. The 50 Ω level allows directly to cascade this amplifier with minimal external circuitry, thus providing a simple, cost effective way to achieve high level amplification.

Features

- Broadband amplification
- 50 Ω cascadable gain block
- High gain (19 dB @900 MHz)
- Low noise figure (2.9 db @900 Mhz)
- High output level
- Low cost surface mount plastic package
- Few external components

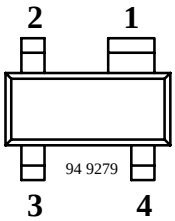

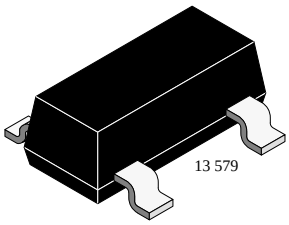

S868T Marking: 868
Plastic case (SOT 143)
1 = RF-output, 2 = Ground,
3 = RF-input, 4 = Ground

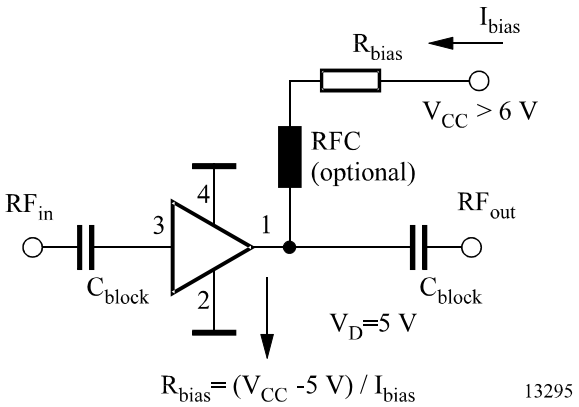

Typical biasing configuration

Absolute Maximum Ratings

T_{amb} = 25°C, unless otherwise specified

Parameter	Test Conditions	Symbol	Value	Unit
Device current		I_{bias}	55	mA
RF input power		P_{in}	20	dBm
Total power dissipation	$T_{amb} \leq 25$ °C	P_{tot}	275	mW
Junction temperature		T_j	150	°C
Storage temperature range		T_{stg}	–65 to +150	°C

Maximum Thermal Resistance

T_{amb} = 25°C, unless otherwise specified

Parameter	Test Conditions	Symbol	Value	Unit
Junction ambient	on glass fibre printed board (25 x 20 x 1.5) mm^3 plated with 35µm Cu	R_{thJA}	450	K/W

Electrical AC Characteristics

I_{bias} = 45 mA, f = 900 MHz , Z_0 = 50 Ω, T_{amb} = 25°C, unless otherwise specified

Parameter	Test Conditions	Symbol	Min	Typ	Max	Unit
Power gain		G_p	17	19		dB
3 dB bandwidth		f_{3dB}		0.5		GHz
Input VSWR	f = 0.1 to 2.5 GHz	VSWR		1.8:1		
Output VSWR	f = 0.1 to 2.5 GHz	VSWR		1.8:1		
Noise figure	f = 900 MHz	F		2.9		dB
Intermodulation distortion	22.5 mV input voltage	IM_3		55		dB
Output power @1dB gain compression		P_{-1dB}		13		dBm
Device voltage		V_d		5		V

Dimensions of S868T in mm

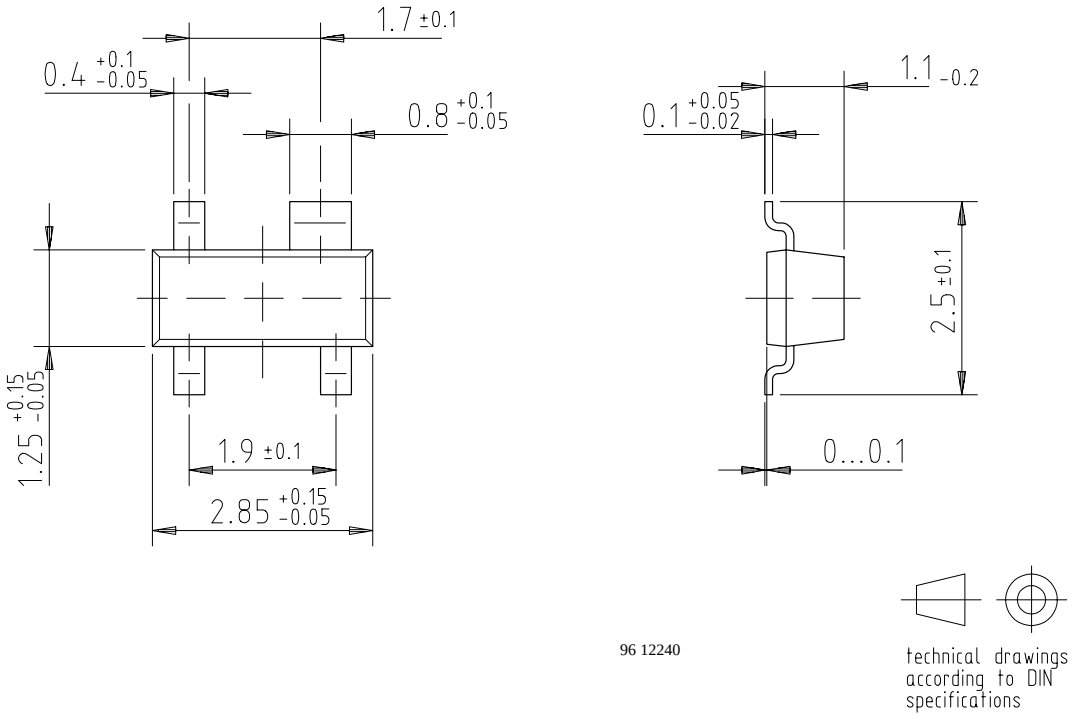

Ozone Depleting Substances Policy Statement

It is the policy of **Vishay Semiconductor GmbH** to

1. Meet all present and future national and international statutory requirements.

2. Regularly and continuously improve the performance of our products, processes, distribution and operating systems with respect to their impact on the health and safety of our employees and the public, as well as their impact on the environment.

It is particular concern to control or eliminate releases of those substances into the atmosphere which are known as ozone depleting substances (ODSs).

The Montreal Protocol (1987) and its London Amendments (1990) intend to severely restrict the use of ODSs and forbid their use within the next ten years. Various national and international initiatives are pressing for an earlier ban on these substances.

Vishay Semiconductor GmbH has been able to use its policy of continuous improvements to eliminate the use of ODSs listed in the following documents.

1. Annex A, B and list of transitional substances of the Montreal Protocol and the London Amendments respectively

2. Class I and II ozone depleting substances in the Clean Air Act Amendments of 1990 by the Environmental Protection Agency (EPA) in the USA

3. Council Decision 88/540/EEC and 91/690/EEC Annex A, B and C (transitional substances) respectively.

Vishay Semiconductor GmbH can certify that our semiconductors are not manufactured with ozone depleting substances and do not contain such substances.

Vishay Semiconductor GmbH, P.O.B. 3535, D-74025 Heilbronn, Germany
Telephone: 49 (0)7131 67 2831, Fax number: 49 (0)7131 67 2423