5mm SQUARE THIN TYPE ISOLATOR

MODEL ESI-5 [ ] 1.900 G - T

(1) (2) (3) (4) (5)

(1) 5mm Square Lumped Element Isolator

(2) Rotating Direction (R or L)

(3) Center Frequency

(4) G ; GHz

(5) T ; Taping

Blank ; Bulk

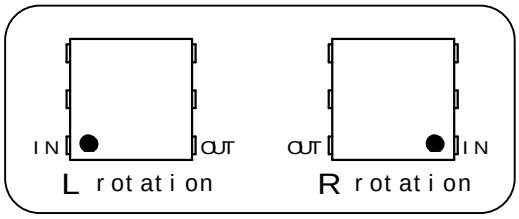

Specification

Frequency (GHz)	Ins. Loss Max. (dB)	Isolation Min. (dB)	V.S.W.R. Max.	Attenuation at 2f Min. (dB)	Attenuation at 3f Min. (dB)	Handling Power Max. (W)	Reflection Power Max. (W)
1.880-1.920	0.60	15	1.5	6	10	5.0	1.0

Operating Temperature(deg.C) ; -35 to +85

Impedance ; 50 ohms Typ.

Shape & Size

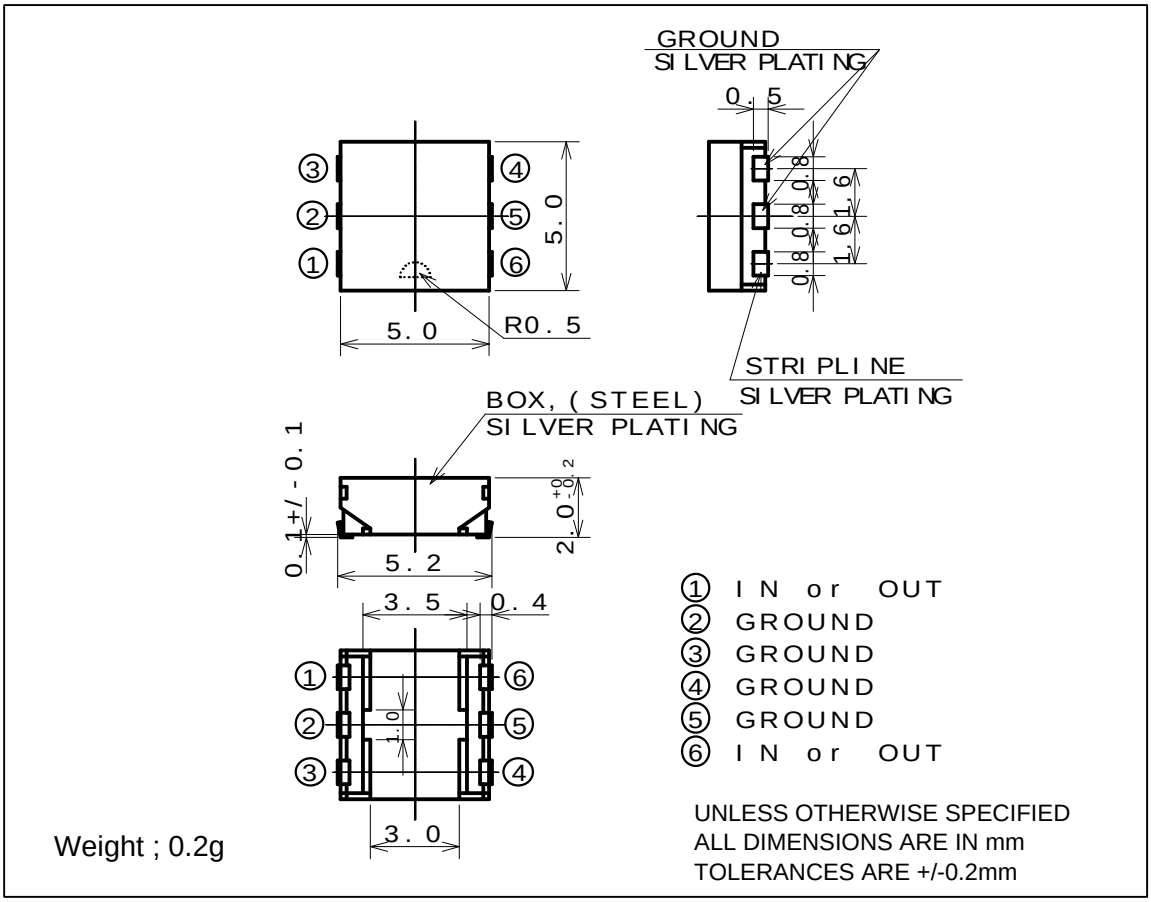

Weight ; 0.2g

TBE017

Hitachi Metals, Ltd. Tottori Works