液晶之友 电话：020-33819057
Http://www.lcdfriends.com

HDM 240GS16-1

2.8” 240 X 160 Dots Graphic

Dimensional Drawing

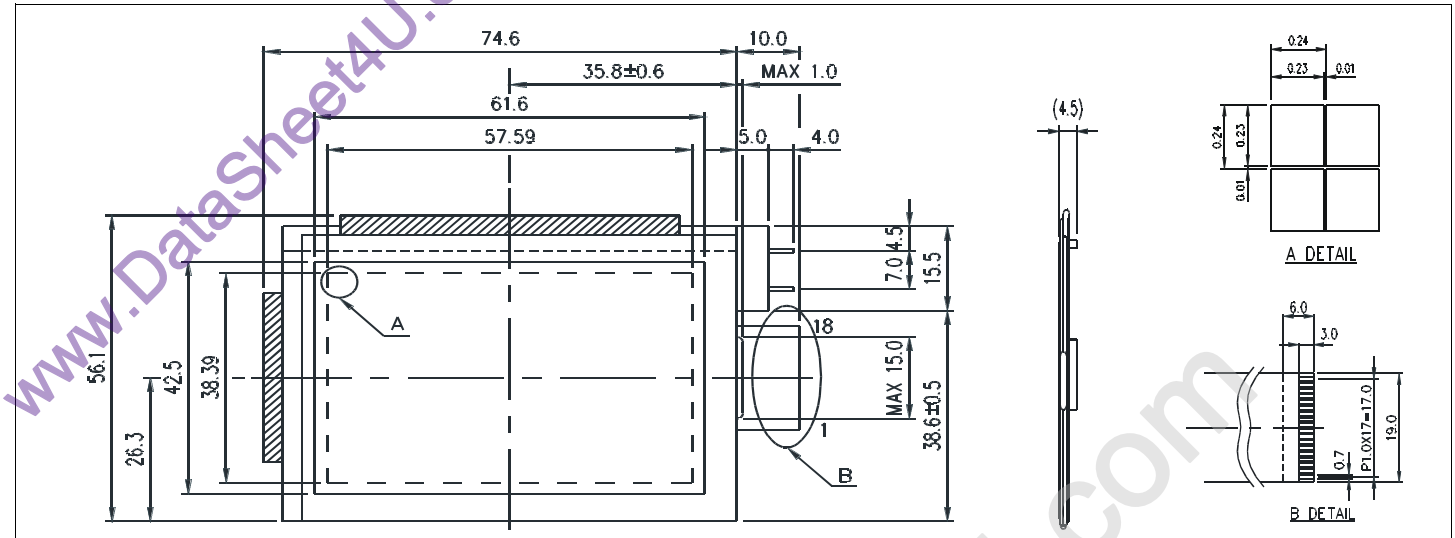

Dimension tolerance: +/-0.3mm

Features

Backlight.....None or EL
Options.....positive STN or FSTN (B/W)
Normal/Extended Temperature
Bottom/Top Viewing
Analog Touch Panel
Built-in Controller.....None

Physical Data

Module Size.....74.6W x 56.1H x 4.5T mm
Viewing Area Size.....61.6W x 42.5H mm
Dot Pitch.....0.24W x 0.24H mm
Dot Size.....0.23W x 0.23H mm
Weight.....15g or 17g

Power Supply

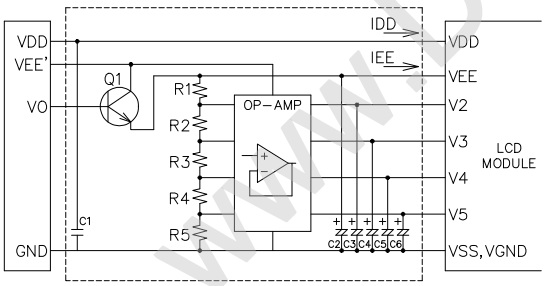

Q1 : 2SC1815
OP-AMP : LP324

R1=R2=R4=R5=10KΩ
R3=9R1=91KΩ (1/13 Bias)
C1=0.1uF, C2~C6=3.3uF

Absolute Maximum Ratings

PARAMETER	SYMBOL	MIN	MAX	UNIT
SUPPLY VOLTAGE	V_{DD}-V_{SS}	-0.3	6.5	V
POWER SUPPLY FOR LCD	V_{EE}-V_{SS}	0	27.0	V
INPUT VOLTAGE	V_{IN}	0	6.5	V
OPERATING TEMPERATURE	T_{OP}	0	50	°C
STORAGE TEMPERATURE	T_{STG}	-20	70	°C

Electrical Characteristics (VDD=3.3±10% 25°C)

PARAMETER	SYM	CONDITION	MIN	TYP	MAX	UNIT
OPERATING VOLTAGE	V_{DD}	-	2.97	3.3	3.63	V
POWER SUPPLY FOR LCD	V_{EE}-V_{SS}	Normal	20.1	20.4	20.7	V
	V_{EE}-V_{SS}	Extended	20.5	20.8	21.1	V
POWER SUPPLY CURRENT (Normal Temp. LCM)	I_{DD}	-	-	0.55	0.83	mA
	I_{EE}	-	-	0.8	1.2	mA
POWER SUPPLY CURRENT (Extended Temp. LCM)	I_{DD}	-	-	0.58	0.88	mA
	I_{EE}	-	-	0.9	1.4	mA
EL Power Supply Current	I_{EL}	65 V_{rms} 250Hz	2.97	3.3	3.63	V
DRIVE METHOD	1/160 Duty					

Pin Connections

PIN NO.	SYMBOL		FUNCTION
1	V_5		Bias Voltage for non-select (Common Driver)
2	V_2		Bias Voltage for non-select (Common Driver)
3	V_{EE}	-	Power supply voltage for LCD
4	V_{DD}	3.3V	Power supply for logic
5	FRAME	H/L	Frame signal (Data signal of the shift register of the common driver)
6	V_{GND}	-	GND, Power supply voltage for LCD
7	LOAD	H/L	1) Display data latch 2) Shift clock for common driver
8	V_{SS}	0V	Ground
9	DF		switch signal to convert LCD drive waveform into AC
10	DISPOFF	L	Display off
11	CP	H/H→L	clock pluse for segment shift register
12	V_4		Bias Voltage for non-select (Segment Driver)
13	V_3		Bias Voltage for non-select (Segment Driver)
14	DB3	H/L	Data bus
15	DB2	H/L	
16	DB1	H/L	
17	DB0	H/L	
18	N/C	-	No connection

www.DataSheet4U.com