DATASHEET

Array Module TPAM 166 L3.9

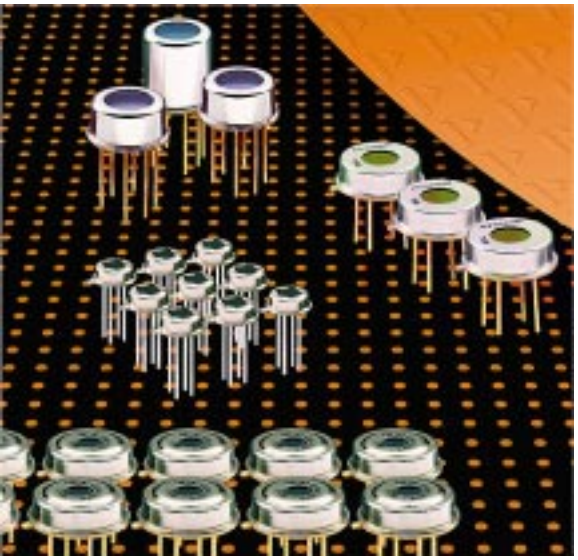

Thermopile Matrix Array with 4x4 Elements

Plug-In Module with Stored Calibration Data

Integrated Optics, Multiplexer, Amplifier, Reference and Self Test Function

Designed for Industrial Temperature Measurements

The integrated **T**hermo**P**ile **A**rray Sensor consists of a 4x4-elements thermopile chip connected to a multiplexing signal conditioning circuit. The sensor is further equipped with an internal temperature sensor for correct target temperature determination. All analogue signals, including the ambient temperature, are given out in a fixed frame, containing the information in one serial stream. Lenses for different field of views are available on demand. The sensor in a TO-5 housing is mounted on a small pcb with calibration data for this specific sensor stored in an E²PROM.

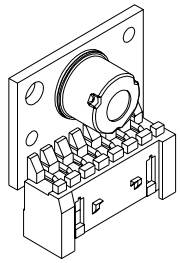

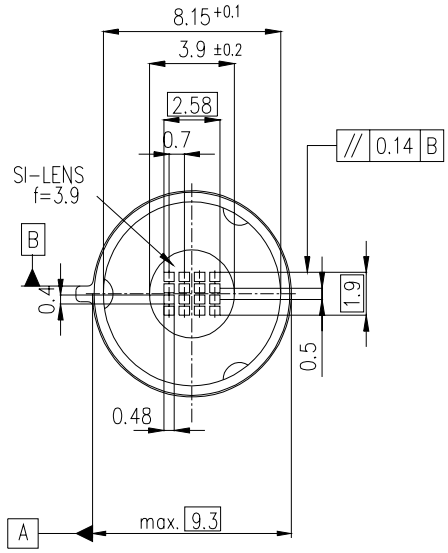

Right for modification reserved / WS / 21.5.2001

Parameters	TPAM	166L3.9		
	typical		units	condition
Field of view	41 x 32		°	f/1, f = 3.9mm
Output voltage	0.95		V	T_{BB}=80°, T_{amb}=20°
Output noise	0.4		mV/√Hz	0.5...20Hz
Object temperature	-20	100	°C	
Operating voltage V_{DD}	5		V	500K BB 5...14µm
Operating current	1		mA	500K BB 5...14µm
Zero signal offset V_{ref}	$V_{DD}/2$		V	
Output resistance	200		Ω	
Power up time	0,3		s	
Sample frequency	3		kHz	
Storage temperature	-40	100	°C	
Operating temperature	-20	100	°C	
Temperature ref slope S_T	10		mV/K	$V_{Temp}=S_T T_{amb}/K+V_0$
Temperature ref offset V_o	0		mV	

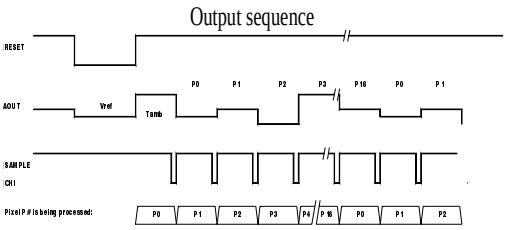

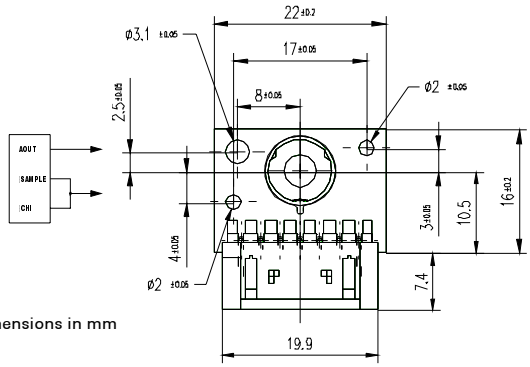

Dimensions in mm

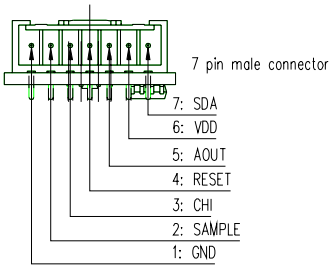

Europe:
PerkinElmer Optoelectronics GmbH
Wenzel Jaksch Str 31
Wiesbaden / Germany
Phone +49(0)611 492 0
Fax +49(0)611 492 170

USA:
PerkinElmer Optoelectronics
2175 Mission Colledge Blvd
Santa Clara, CA 95054
Phone +408 565 0830
Fax +408 565 0703

Asia:
PerkinElmer Optoelectronics
47, Ayer Rajah Crescent #06-12
Singapore 139947
Phone +65 775 2022
Fax +65 775 1008